A.A. 2024-25. Exercise 2: Design of a new reinforced concrete building

Léonard Boulitreau	Matr. 10987537
Mael Le Hong	Matr. 10990221
Priyadarshini Radjcoumar	Matr. 10886834
Fabio Lonciari	Matr. 10848138

ABSTRACT: The purpose of this report is to design a three-stories building to be built in the city of L'Aquila. The structural typology will be defined, as well as the response spectrum and other acting loads. A model of the building will be realised in the software Midas, that will allows the computation of the internal forces and moments acting on the building's elements, the verification of the structural typology and criteria for regularity. Then, the design of beams, columns and shear walls will be done according to Eurocode 2 and Eurocode 8. Bending and shear reinforcement, as well as local ductility checks will be derived from these standards. Finally, the total reinforcement per cubic meter of concrete and other factors will be computed.

TABLE OF CONTENT

1. DESCRIPTION OF THE STRUCTURE 6
1.1. Location 6
1.2. Design code 6
1.3. Geometry 6
1.4. Materials 9
2. LOADS 10
2.1. Seismic load 10
2.1.1. Horizontal elastic spectrum. 10
2.1.2. Vertical elastic spectrum. 11
2.1.3. Design spectrum 13
2.2. Wind Actions 14
2.3. Snow loads 17
2.4. Load combinations 17
3. MODELLING OF THE STRUCTURE 19
4. VERIFICATION OF THE DUAL SYSTEM (WALL EQUIVALENT DUAL SYSTEM) 20
5. VERIFICATION OF THE PRIMARY AND SECONDARY MEMBERS 20
6. CRITERIA FOR STRUCTURAL REGULARITY 21
6.1. Regularity in plan 21
6.2. Torsional irregularity 21
6.3. Regularity in elevation 22
7. BEAMS DESIGN ACCORDING TO EUROCODE 2 22
7.1. Static model and cross-section of the beam 22
7.2. Bending reinforcement 24
7.3. Shear design 26
8. COLUMNS DESIGN ACCORDING TO EUROCODE 2 30
8.1. Shear reinforcement 33
9. BEAMS DESIGN ACCORDING TO EUROCODE 8 34
9.1. Static model and cross-section of the beam 34
9.2. Bending reinforcement 34
9.3. Shear design 38
9.4. Local ductility requirements (EC8: 5.4.3.1.2) 44
10. COLUMNS DESIGN ACCORDING TO EUROCODE 8 47
10.1. Shear reinforcement: 48
10.2. Critical sections: 49
10.3. Beam-column joint 51
11. DESIGN OF SHEAR WALLS 51
11.1. Dimension Check 51
11.2. Structural system 52
11.3. Behavior factor 52

11.4. Flange of the shear wall 52
11.5. Shear strength of shear wall 53
11.6. Moment Envelope 54
11.7. Shear Envelope 56
11.8. Confinement Length 59
11.9. Manual check on base shear due to seismic action 61
12. KILOGRAM OF STEEL PER CUBIC METER OF CONCRETE AND SAFETY RATIO 63
13. CONCLUSION 65
BIBLIOGRAPHY 65

LIST OF FIGURES

Figure 1: Plan view of the building 6
Figure 2: Plan view of the structure showing the designed beams 7
Figure 3: Lateral section of the structure showing beams A 7
Figure 4: Lateral section of the structure showing beams B 7
Figure 5: Plan view of the structure showing the designed columns 8
Figure 6: Lateral section of the structure showing the designed columns 8
Figure 7: Structural classes 9
Figure 8: Values of $cmin, dur$ 10
Figure 9: System of expressions that define the Se(T), EC8 par. 3.2.2.2. 10
Figure 10: Horizontal elastic spectrum 11
Figure 11: System of expressions that define the Sve(T), EC8 par. 3.2.2.3. 11
Figure 12: System of expressions that define the Sve(T), EC8 par. 3.2.2.3. 11
Figure 13: Vertical elastic spectrum 12
Figure 14: System of expressions that define the Sd(T), EC8 par. 3.2.2.5. 13
Figure 15: Design elastic spectrum 14
Figure 16: Wind parameters in different regions according to Italian National Annex 15
Figure 17: Exposure categories according to Italian National Annex 15
Figure 18: Profile of velocity pressure 16
Figure 19: Sections of the building 16
Figure 20: Pressure coefficients in different sections 17
Figure 21: Midas model of the structure 19
Figure 22: Plan configuration and polygonal convex line 21
Figure 23: Definition of the effective flange width 22
Figure 24: Distance between points of zero moment 23
Figure 25: Simplified concrete design block 24
Figure 26: Determination of the effective column height 31
Figure 27: Reinforcement diagram 32
Figure 28: Effective width in primary seismic beams 34
Figure 29: Beams B reinforcement 46
Figure 30: Beams A reinforcement 47
Figure 31: Ties in column I's base 50
Figure 32: Ties in columns II, III, and IV's base 50
Figure 33: Columns reinforcement 51
Figure 34: M-N curve of the shear walls 53
Figure 35: Moment envelope of shear wall 1 54
Figure 36: Moment envelope of shear wall 2 55
Figure 37: Moment envelope of shear wall 3 55
Figure 38: Moment envelope of shear wall 4 56
Figure 39: Shear envelope of shear wall 1 57
Figure 40: Shear envelope of shear wall 2 57
Figure 41: Shear envelope of shear wall 3 58
Figure 42: Shear envelope of shear wall 4 58
Figure 43: Confinement length 59
Figure 44: Cross-sectional view of the shear wall 60
Figure 45: Distance between the stirrups 61
Figure 46: Elastic response spectrum 62

LIST OF TABLES

Table 1: Characteristics of concrete 9
Table 2: Characteristics of steel 9
Table 3: Recommended values of parameters describing the vertical elastic response spectra 12
Table 6: Pressure coefficients for the building 17
Table 7: Summary of the loads and their coefficients 18
Table 8: ULS load combinations 18
Table 9: Seismic load combinations 18
Table 10: Base shear in columns 20
Table 11: Eccentricities 21
Table 12: Eccentricity ratios 22
Table 13: $beff$ of beam B's sections 23
Table 14: $beff$ of beam A's sections 23
Table 15: Reinforcement details in bending for beam B 25
Table 16: Reinforcement details in bending for beam A 26
Table 17: Acting shear force in beam B 27
Table 18: Acting shear force in beam A 28
Table 19: Shear reinforcement in beam B 29
Table 20: Shear reinforcement in beam A 30
Table 21: Slenderness of the columns 31
Table 22: Bending reinforcement in columns 33
Table 23: Shear reinforcement in columns 33
Table 24: Bending reinforcement in beam B under seismic loads 34
Table 25: Bending reinforcement in beam A under seismic loads 35
Table 26: Comparison between EC2 and EC8 bending reinforcement in beam B 36
Table 27: Comparison between EC2 and EC8 bending reinforcement in beam A 37
Table 28: Bending reinforcement details in beams 37
Table 29: Acting shear force due to seismic loading in beam B 38
Table 30: Acting shear force due to seismic loading in beam A 39
Table 31: Required shear reinforcement due to seismic loading in beam B 40
Table 32: Required shear reinforcement due to seismic loading in beam A 41
Table 33: Comparison between shear reinforcement in EC2 and EC8 in beam B 42
Table 34: Comparison between shear reinforcement in EC2 and EC8 in beam A 43
Table 35: Shear reinforcement details of beams 44
Table 36: Checks for local ductility in beams 45
Table 37: Additional reinforcement in beam's critical regions 45
Table 38: Maximum diameter of longitudinal bars in beam-column joints 46
Table 39: Bending reinforcement in columns for seismic loads 47
Table 40: Comparison of bending reinforcement between EC2 and EC8 47
Table 41: Bending reinforcement details in columns 48
Table 42: Shear reinforcement in columns due to seismic loads 48
Table 43: Comparison of shear reinforcement between EC2 and EC8 48
Table 44: Shear reinforcement details in non-critical regions of columns 48
Table 45: Additional checks in the columns 49
Table 46: Length of critical regions in columns 49
Table 47: Reinforcement in the critical region at the base of columns 50
Table 48: Reinforcement in shear walls 61
Table 49: Base shear corresponding to elastic response spectrum 62
Table 50: Kilograms of reinforcement per cubic meter in beams 63
Table 51: Kilograms of reinforcement per cubic meter in columns 63
Table 52: Kilograms of reinforcement per cubic meter in shear walls 63
Table 53: Kilograms of reinforcement per cubic meter in nodes 64
Table 54: Structural plan density factor 64
Table 55: Safety factor at ground floor 64

1. DESCRIPTION OF THE STRUCTURE

1.1. Location

The building to be constructed under study will be located in L'Aquila, Abruzzi. This city is located in a region often subjected to earthquake, due to the presence of the Paganica fault in the Apennines mountains. In 2009, a devastating earthquake of 5,9 on the Richter scale occurred in L'Aquila, causing the death of 309 people and injuring more than 1,500 people.

The building will be built on a soil of type B, and the city is located 750m above sea level.

1.2. Design code

The design code for this project will be the Eurocode 8, with a type 1 response spectrum.

1.3. Geometry

The building has three stories, its structural type is a dual system, design in ductility class DCM. Four shear walls are present on the whole structure, one on each external side. The vertical members are assumed to be fully restrained at their base.

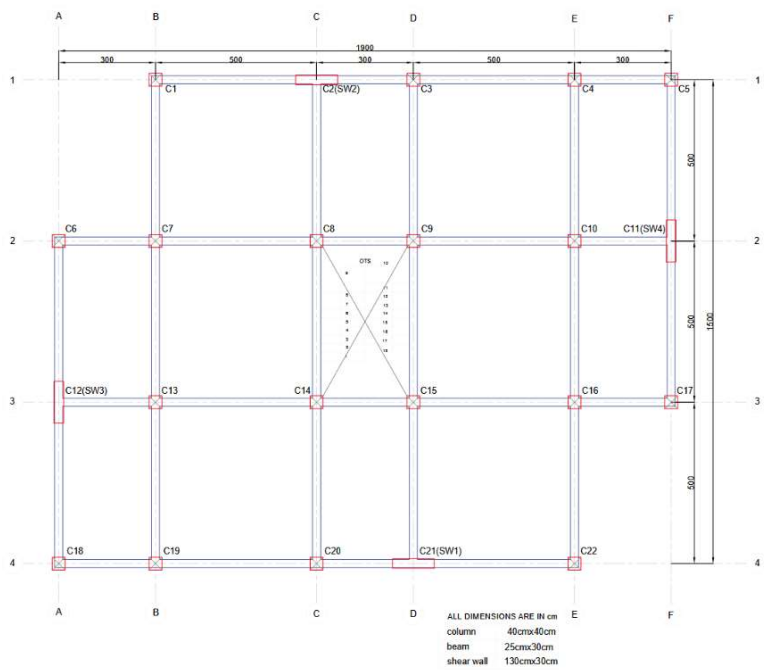

Figure 1: Plan view of the building

The beams under study are labelled B.i and A.i in the x and y axis respectively, i denoting the story with i between 1 and 3.

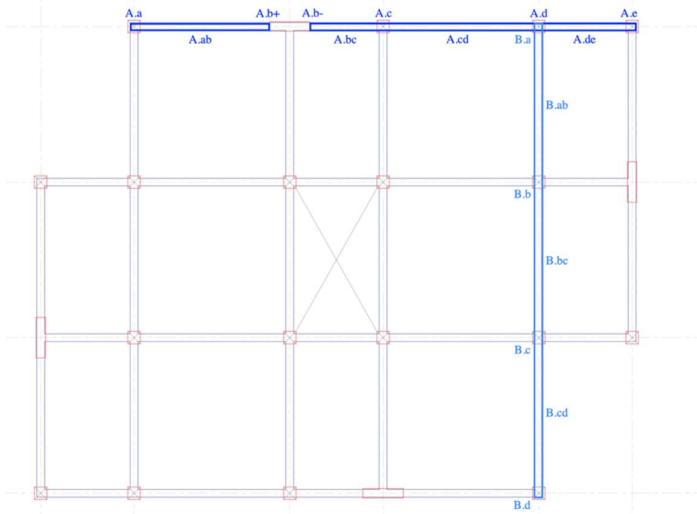

Figure 2: Plan view of the structure showing the designed beams

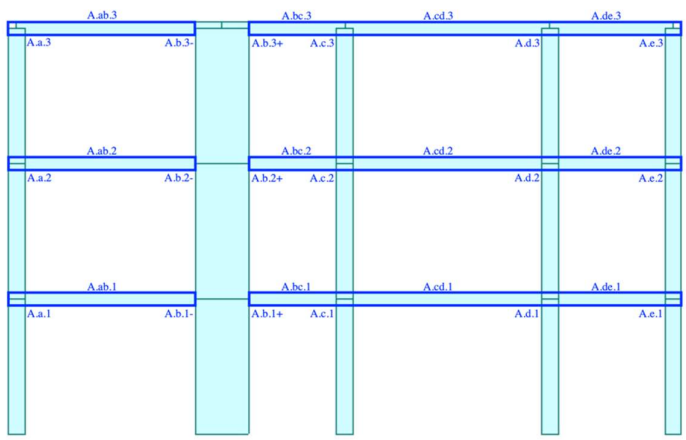

Figure 3: Lateral section of the structure showing beams A

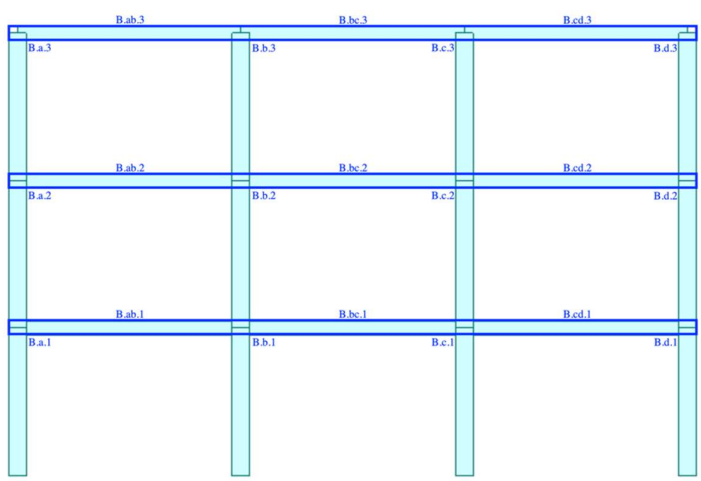

Figure 4: Lateral section of the structure showing beams B

The columns under study are labelled I.i, II.i, III.i, and IV.i, corresponding to an external column in the x direction, a internal column, an external corner column and an external non-corner one in the y direction, respectively, with i denoting the story, i between 1 and 3.

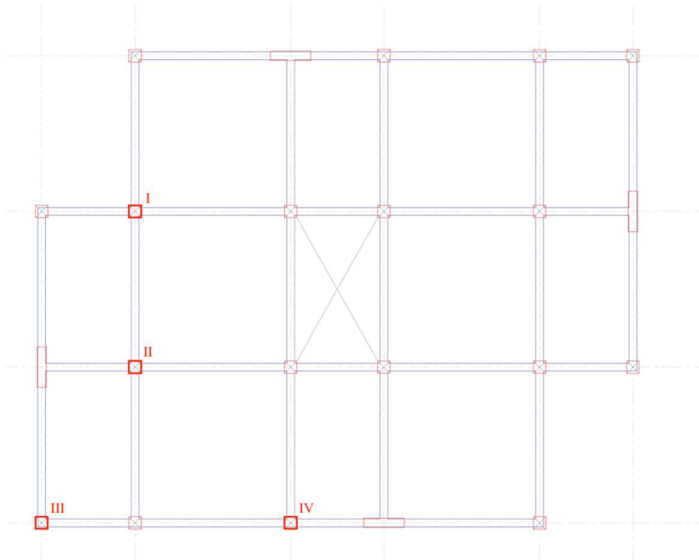

Figure 5: Plan view of the structure showing the designed columns

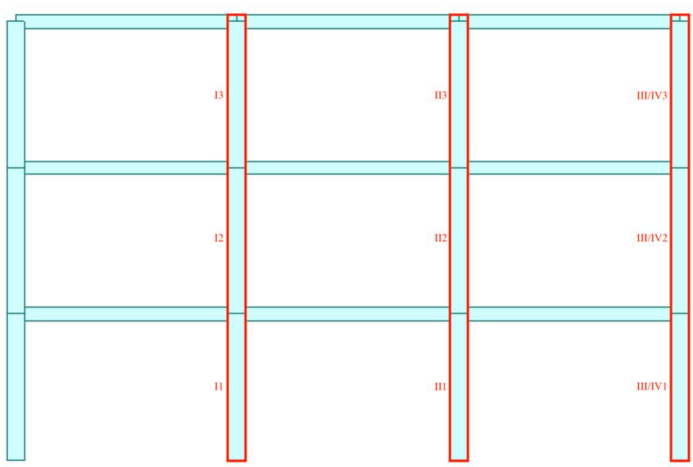

Figure 6: Lateral section of the structure showing the designed columns

1.4. Materials

The materials selected for the structure include concrete with a cylindrical compressive strength of 25MPa and high-ductility steel with a characteristic yield strength of 500MPa. The following table summarizes the material's characteristics:

Table 1: Characteristics of concrete

Parameters	Value	Unit
Characteristic compressive strength, $\boldsymbol{f_{ck}}$	25	MPa
Design compressive strength, $\boldsymbol{f_{cd}}$	16.67	MPa
Tensile strength, $\boldsymbol{f_{ctm}}$	2.6	MPa
Unit weight	25	kN/m^3

Table 2: Characteristics of steel

Parameters	Value	Unit
Characteristic yield strength, $\boldsymbol{f_{yk}}$	500	MPa
Design yield strength, $\boldsymbol{f_{yd}}$	434.78	MPa
Young modulus, $\boldsymbol{E_s}$	200000	MPa
Unit weight	78.5	kN/m^3

The considered exposure class for the concrete is XC3, which corresponds to corrosion induced by carbonation, in a moderate humidity environment. The nominal concrete cover has to be computed in accordance with this exposure class, in order that the steel is protected from the environment, using this formula (EC2: 4.4.1):

$$c_{nom} = c_{min} + \Delta c_{dev}$$

With:

$$c_{min} = max\{c_{min,b}; c_{min,dur} + \Delta c_{dur,\gamma} - \Delta c_{dur,st} - \Delta c_{dur,add}; 10\ mm\}$$

$c_{min,b}$ is equal to the diameter of the rebars, which are not greater than 25mm in our project.

To compute the nominal concrete cover $c_{min,dur}$ the structural class has been identified, using this table:

Criterion	Structural Class Exposure Class according to Table 4.1 *(Eurocode 2)*						
	X0	X1	XC2/XC3	XC4	XD1	XD2 / XS1	XD3 / XS2 / XS3
Design Working Life of 100 years	increase class by 2	increase class by 2	increase class by 2	increase class by 2	increase class by 2	increase class by 2	increase class by 2
Strength Class [1) 2)]	≥ C30/37 reduce class by 1	≥ C30/37 reduce class by 1	≥ C35/45 reduce class by 1	≥ C40/50 reduce class by 1	≥ C40/50 reduce class by 1	≥ C40/50 reduce class by 1	≥ C45/55 reduce class by 1
Member with slab geometry (position of reinforcement not affected by construction process)	reduce class by 1	reduce class by 1	reduce class by 1	reduce class by 1	reduce class by 1	reduce class by 1	reduce class by 1
Special Quality Control of the concrete production ensured	reduce class by 1	reduce class by 1	reduce class by 1	reduce class by 1	reduce class by 1	reduce class by 1	reduce class by 1

Figure 7: Structural classes

The default structural class is S4, and it is not modified on the basis of the criteria of the table. Using this table, the value for $c_{min,dur}$ is 25 mm.

Environmental Requirement for $c_{min,dur}$ (mm)							
Structural Class	Exposure Class according to Table 4.1						
	X0	XC1	XC2 / XC3	XC4	XD1 / XS1	XD2 / XS2	XD3 / XS3
S1	10	10	10	15	20	25	30
S2	10	10	15	20	25	30	35
S3	10	10	20	25	30	35	40
S4	10	15	25	30	35	40	45
S5	15	20	30	35	40	45	50
S6	20	25	35	40	45	50	55

Figure 8: Values of $c_{min,dur}$

$\Delta c_{dur,\gamma} = 0$ is the recommended value, as well as $\Delta c_{dur,st}$ and $\Delta c_{dur,add}$.
The recommended value for Δc_{dev} is 10mm.

The final value for the nominal concrete cover used in the beams, columns and shear walls is $c_{nom} = 35mm$.

2. LOADS

2.1. Seismic load

In seismic design and assessment, horizontal loads induced by earthquakes represent one of the most critical actions for structural safety. These forces arise from the dynamic interaction between ground motion and the mass of the structure and must be carefully evaluated in terms of both intensity and frequency content.

In the present analysis, seismic loads are determined in accordance with Eurocode 8 (EN 1998-1), which provides the general principles for assessing seismic actions on structures.

It was considered a soil type B, a nominal life of the structure of 50 years for buildings with ordinary performance levels, and the structure is considered with an importance class I.

According to the code, the design response spectrum to be used for both vertical and horizontal components, is the corresponding elastic design response spectrum.

2.1.1. Horizontal elastic spectrum.

In order to compute the horizontal design response spectrum, it is first necessary to evaluate the horizontal elastic spectrum. According to Eurocode 8, the definition of the period intervals must be based on specific parameters. The peak ground acceleration is taken as 0.25g for the SLV limit state, following the provisions of the National Annex. A soil factor S=1.2 is adopted based on the classification of the site as Soil Type B. The damping correction factor η is considered for a damping ratio of 5%, and the importance factor γI is assumed to be equal to 1. The characteristic periods TB=0.15 s, TC =0.5s, and TD=2.0 s are established according to Eurocode 8 for a Type 1 spectrum on Soil Type B.

$$0 \le T \le T_B : S_e(T) = a_g \cdot S \cdot \left[1 + \frac{T}{T_B} \cdot (\eta \cdot 2{,}5 - 1) \right] \tag{3.2}$$

$$T_B \le T \le T_C : S_e(T) = a_g \cdot S \cdot \eta \cdot 2{,}5 \tag{3.3}$$

$$T_C \le T \le T_D : S_e(T) = a_g \cdot S \cdot \eta \cdot 2{,}5 \left[\frac{T_C}{T} \right] \tag{3.4}$$

$$T_D \le T \le 4s : S_e(T) = a_g \cdot S \cdot \eta \cdot 2{,}5 \left[\frac{T_C T_D}{T^2} \right] \tag{3.5}$$

Figure 9: System of expressions that define the Se(T), EC8 par. 3.2.2.2.

Where Se (T) is the elastic response spectrum; TB is the lower limit of the period of the constant spectral acceleration branch;TC is the upper limit of the period of the constant spectral acceleration branch; TD is the period defining the beginning of the constant displacement response range of the spectrum.

With all the necessary input defined, the resulting horizontal elastic spectrum is presented in the following diagram.

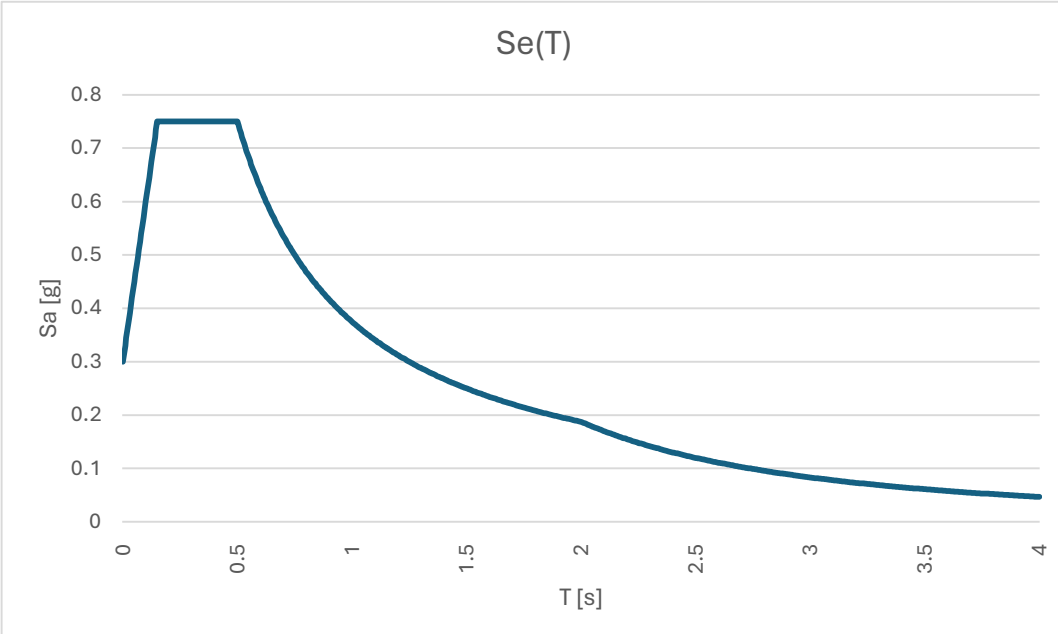

Figure 10: Horizontal elastic spectrum

2.1.2. Vertical elastic spectrum.

In addition to the horizontal component, Eurocode 8 also provides a formulation for the vertical elastic response spectrum. This spectrum is typically relevant for structures with significant vertical load sensitivity or irregular mass and stiffness distribution. The vertical spectrum is defined through a simplified formulation, using parameters similar to those adopted for the horizontal case but with adjusted period ranges and amplification values. The following equations and figure illustrate the vertical elastic response spectrum as prescribed by the code.

$$0 \le T \le T_B : S_{ve}(T) = a_{vg} \cdot \left[1 + \frac{T}{T_B} \cdot (\eta \cdot 3{,}0 - 1) \right] \tag{3.8}$$

$$T_B \le T \le T_C : S_{ve}(T) = a_{vg} \cdot \eta \cdot 3{,}0 \tag{3.9}$$

$$T_C \le T \le T_D : S_{ve}(T) = a_{vg} \cdot \eta \cdot 3{,}0 \left[\frac{T_C}{T} \right] \tag{3.10}$$

$$T_D \le T \le 4\text{s} : S_{ve}(T) = a_{vg} \cdot \eta \cdot 3{,}0 \left[\frac{T_C . T_D}{T^2} \right] \tag{3.11}$$

Figure 11: System of expressions that define the Sve(T), EC8 par. 3.2.2.3.

The expression shown defines the vertical elastic response spectrum: as in the horizontal case, the spectral shape depends on the vibration period T and is characterized by specific amplification and transition periods. The vertical design ground acceleration is calculated as a proportion of the horizontal value. The following table, referring to Type 1 spectra, indicates the recommended ratio between vertical and horizontal accelerations, selected in this case due to the ground type and the high magnitude of the seismic event.

Table 3: Recommended values of parameters describing the vertical elastic response spectra

Spectrum	a_{vg}/a_g	TB (S)	TC (S)	TD (S)
Type 1	0.90	0.05	0.15	1.0
Type 2	0.45	0.05	0.15	1.0

Based on the parameters and expressions provided, the vertical elastic response spectrum has been derived and is represented in the following figure.

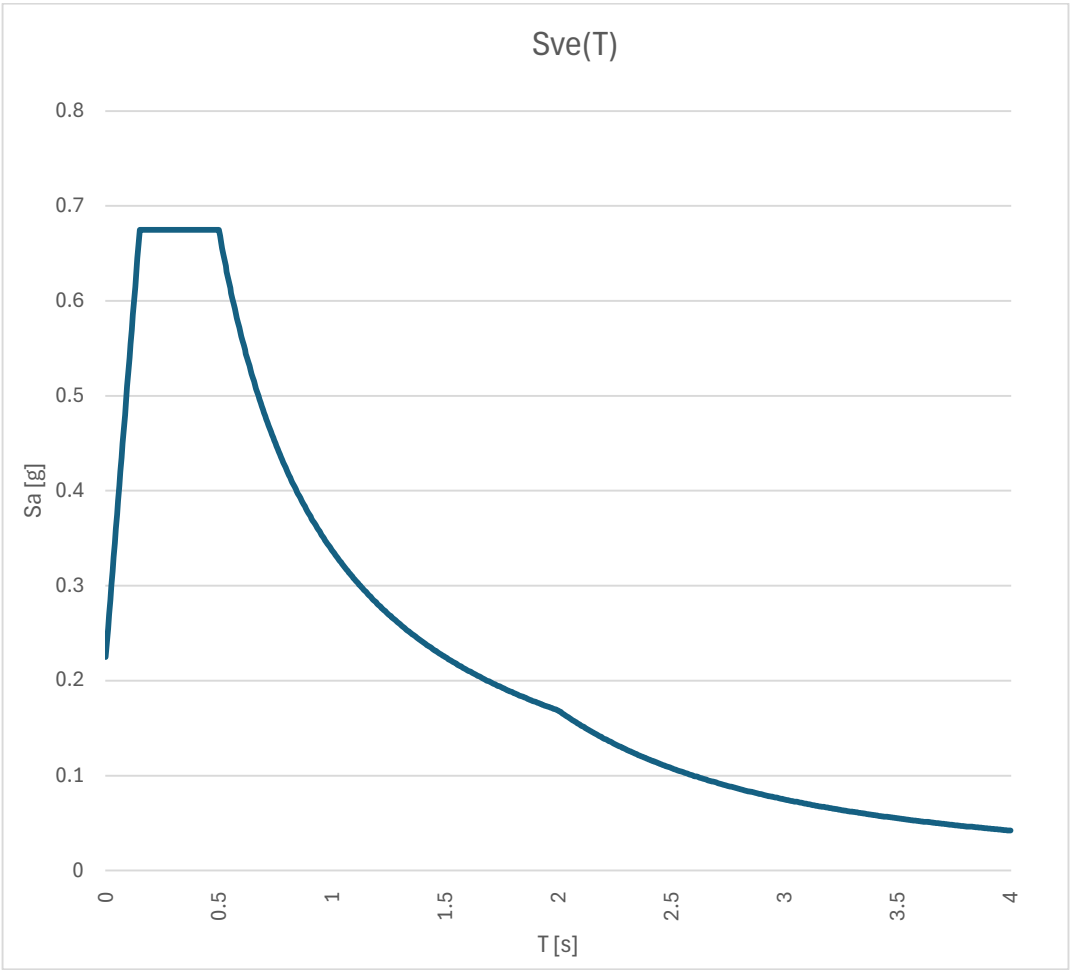

Figure 13: Vertical elastic spectrum

2.1.3. Design spectrum

The design response spectrum for elastic analysis is derived from the elastic response spectrum by applying a reduction factor to account for the energy dissipation capacity of the structure.

According to Eurocode 8, this is done by dividing the elastic spectrum by the behaviour factor q, which reflects the expected level of ductility and overstrength of the structural system. The resulting design spectrum maintains the same general shape as the elastic spectrum but exhibits reduced spectral accelerations. For the present case, the behaviour factor has been taken as q=3.6, in accordance with Table 5.1 of paragraph 5.2.2.1 of Eurocode 8, corresponding to a reinforced concrete frame with shear walls designed for ductility class medium (DCM). The design spectrum thus obtained is used as input for the linear dynamic analysis of the structure.

$$0 \le T \le T_B : S_d(T) = a_g \cdot S \cdot \left[\frac{2}{3} + \frac{T}{T_B} \cdot \left(\frac{2,5}{q} - \frac{2}{3} \right) \right] \tag{3.13}$$

$$T_B \le T \le T_C : \; S_d(T) = a_g \cdot S \cdot \frac{2,5}{q} \tag{3.14}$$

$$T_C \le T \le T_D : S_d(T) \begin{cases} = a_g \cdot S \cdot \frac{2,5}{q} \cdot \left[\frac{T_C}{T} \right] \\ \ge \beta \cdot a_g \end{cases} \tag{3.15}$$

$$T_D \le T : \quad S_d(T) \begin{cases} = a_g \cdot S \cdot \frac{2,5}{q} \cdot \left[\frac{T_C T_D}{T^2} \right] \\ \ge \beta \cdot a_g \end{cases} \tag{3.16}$$

Figure 14: System of expressions that define the Sd(T), EC8 par. 3.2.2.5.

Based on the equations provided by Eurocode 8 and the selected parameters, the design response spectrum has been computed. The resulting spectrum, which incorporates the structural behaviour factor and the site-specific conditions, is shown in the following figure.

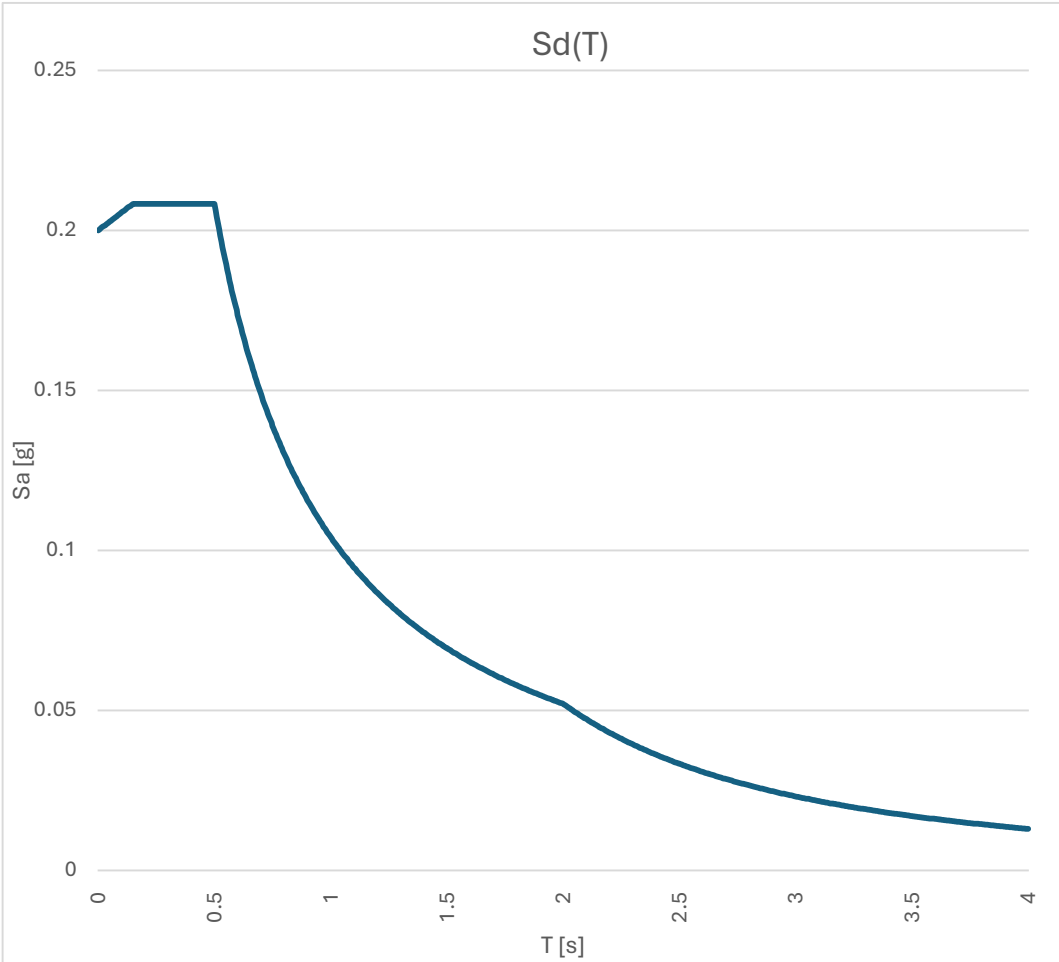

Figure 15: Design elastic spectrum

2.2. Wind Actions

The horizontal actions due to the wind have to be computed, from the EN 1991-1-4. If the value of the base shear in the wind configuration is smaller than the earthquake's one, it's possible to omit it.

The first step is to compute the basic wind velocity, from 4.2:

$$v_b = c_{dir} \cdot c_{season} \cdot v_{b,0}$$

With $v_{b,0}$ the fundamental value of the basic wind velocity, c_{dir} the directional factor, and c_{season} the season factor, both equal to one.

The formula to compute vb,0 is given in the national annex:

$$v_{b,0} = \overline{v}_{b,0} \qquad for\ a_s \leq a_0$$
$$v_{b,0} = \overline{v}_{b,0} + k_a(a_s - a_0)\ \ for\ a_0 \leq a_s \leq 1500\ m$$

In the case of L'Aquila, the city is located in zone 3, a_0 is then equal to 500m, and with a height above the sea level $a_s = 714\ m$, the second equation should then be used.

Zona	Descrizione	$\bar{v}_{b,0}$ (m/s)	a_0	k_0 (1/s)
1	Valle d'Aosta, Piemonte, Lombardia, Trentino Alto Adige, Veneto, Friuli Venezia Giulia (con l'eccezione della prov. di Trieste)	25	1000	0.010
2	Emilia Romagna	25	750	0.015
3	Toscana, Marche, Umbria, Lazio, Abruzzo, Molise, Campania, Puglia, Basilicata, Calabria (esclusa la prov. di Reggio Calabria)	27	500	0.020
4	Sicilia e prov. di Reggio Calabria	28	500	0.020
5	Sardegna (zona a oriente della retta congiungente Capo Teulada con l'isola della Maddalena)	28	750	0.015
6	Sardegna (zona a occidente della retta congiungente Capo Teulada con l'isola della Maddalena)	28	500	0.020
7	Liguria	28	1000	0.015
8	Provincia di Trieste	30	1500	0.010
9	Isole (con l'eccezione di Sicilia e Sardegna) e mare aperto	31	500	0.020

Figure 16: Wind parameters in different regions according to Italian National Annex

With these values, v_b can be computed and is equal to 31.28 m/s.

The next step is the computation of the mean wind velocity $v_m(z)$ that can be determined using the expression present in 4.3.1:

$$v_m(z) = c_r(z) \cdot c_0(z) \cdot v_b$$

With $c_0(z)$ the orography factor equals to 1, and $c_r(z)$ the roughness factor.

$c_r(z)$ is computed through 4.3.2:

$$c_r(z) = k_r \cdot \ln\left(\frac{z}{z_0}\right) \quad for\ z_{min} \leq z \leq z_{max}$$

$$c_r(z) = c_r(z_{min}) \quad for\ z \leq z_{min}$$

Considering that the building is located in an area in roughness class B (urban area) and in exposure category IV, the value for k_r, z_0 and z_{min} are given by a table in the national annex:

Categorie di esposizione	k_r	z_0(m)	z_{min}(m)
I	0,17	0,01	2
II	0,19	0,05	4
III	0,20	0,10	5
VI	0,22	0,30	8
V	0,23	0,70	12

Figure 17: Exposure categories according to Italian National Annex

The wind turbulence $I_v(z)$ has now to be computed with 4.4:

$$I_v(z) = \frac{\sigma_v}{v_m(z)} = \frac{k_1}{c_o(z) \cdot \ln(z/z_0)} \; for \; z_{min} \leq z \leq z_{max}$$

$$I_v(z) = I_v(z_{min}) \; for \; z \leq z_{min}$$

With k_1 the turbulence factor, with a recommended value of 1.

The peak velocity pressure $q_p(z)$ is given in 4.5 by:

$$q_p(z) = [1 + 7 \cdot I_v(z)] \cdot \frac{1}{2} \cdot \rho \cdot v_m^2(z)$$

With $\rho = 1.25 \; kg/m^3$ the air density.

The last step is the computation of the wind pressure acting on the external surfaces w_e (5.2):

$$w_e = q_p(z_e) \cdot c_{pe}$$

With z_e the reference height for the external pressure, equals to 1 because the height of the building $h = 9.9 \; m$ is smaller than the minimum width $b = 15 \; m$.

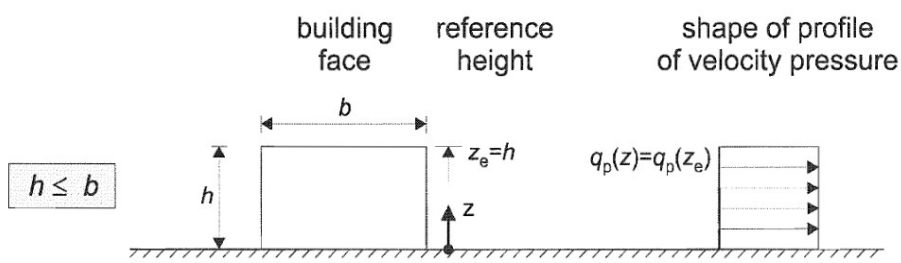

Figure 18: Profile of velocity pressure

c_{pe} is the pressure coefficient for the external pressure (7.2.1).

The wind pressures acting on the structure in both direction x and y have to be computed. The values of c_{pe} have to be identified for the section D (windward) and E (leeward):

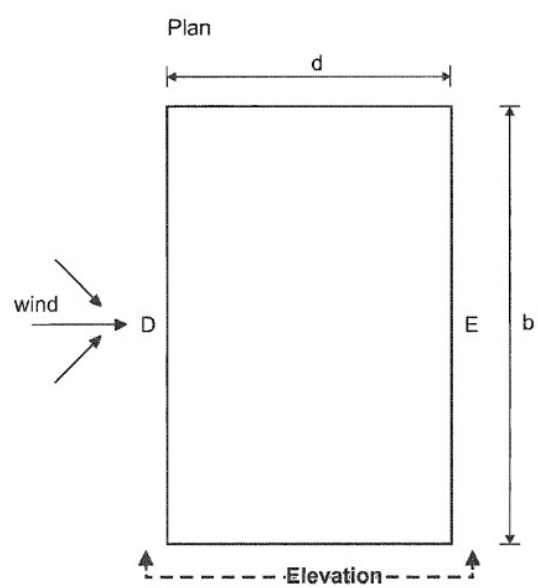

Figure 19: Sections of the building

The values are then computed trough a linear interpolation from values given in the table:

Zone	A		B		C		D		E	
h/d	$c_{pe,10}$	$c_{pe,1}$	$c_{pe,10}$	$c_{pe,1}$	$c_{pe,10}$	$c_{pe,1}$	$c_{pe,10}$	$c_{pe,1}$	$c_{pe,10}$	$c_{pe,1}$
5	-1,2	-1,4	-0,8	-1,1	-0,5		+0,8	+1,0	-0,7	
1	-1,2	-1,4	-0,8	-1,1	-0,5		+0,8	+1,0	-0,5	
≤ 0,25	-1,2	-1,4	-0,8	-1,1	-0,5		+0,7	+1,0	-0,3	

Figure 20: Pressure coefficients in different sections

And final results are:

Table 4: Pressure coefficients for the building

c_{pe}	D (windward)	E (leeward)
-	-	-
Facade X	0.736	-0.372
Façade Y	0.755	-0.409

Finally, the wind pressure acting on the structure are:
For the facade with the wind in direction x: $w_e = 1.20\, kN/m^2$
For the facade with the wind in direction y: $w_e = 1.26\, kN/m^2$

2.3. Snow loads

Snow load on roof can be computed according to EN 1991-1-3.

$$s = \mu_i\, C_e\, C_t\, s_k$$

The snow load shape coefficient is $\mu_i = 0.8$ because the roof is flat. The exposure coefficient C_e and the thermal coefficient C_t are equal to 1.

The characteristic value of snow load on the ground is computed from Italian national annex. L'Aquila is located in zone III with $a_s = 750\, m > 200\, m$.

$$s_k = 0.51\left[1 + \left(\frac{a_s}{481}\right)^2\right] = 1.63\ kN/m^2$$

Finally, $s = 1.31\ kN/m^2$

2.4. Load combinations

Multiple loads are present: the self-weight of the structure, the permanent loads due to finishing, pavement and the facade, the service loads and the environmental loads (wind, snow and earthquake). In order to take all of them into consideration, several loads combination are defined:

- The first ones, related to the Ultimate Limit State (ULS) computed through the formula:
$$\gamma_{Gsup} \cdot G_k + \gamma_{1,k} \cdot Q_{k,1} + \sum_j \gamma_{1,j} \cdot \psi_{0,k} \cdot Q_{k,j}$$
- The second ones, related to the accidental configuration with the presence of seismic loads:
$$G_k + \sum_j \psi_{2,k} \cdot Q_{k,j} + E_i$$

The following table summarizes each load and its associated coefficients:

Table 5: Summary of the loads and their coefficients

Load name	Load's value kN/m²	γ_1	ψ_0	ψ_2
Dead load of the structure, G_1	Depends on the section of the element	1.35		
Dead load of interiors, G_2	3	1.35		
Dead load of the façade, G_2	8	1.35		
Service load (Dwelling), Q_1	2	1.5	0.7	0.3
Service load (Stairs), Q_1	4	1.5	0.7	0.3
Wind load, W	X direction: 1.20 Y direction: 1.26	1.5	0.6	0
Snow load, S	1.31	1.5	0.5	0

Finally, the load combination that will be tested are defined by the value of the coefficient associated with each load.

For the ULS configuration:

Table 6: ULS load combinations

Nomenclature	G_1	G_2	Q_1	W_x	W_y	S
ULS1	1.35	1.35	1.5	0.9	0	0.75
ULS2	1.35	1.35	1.05	1.5	0	0.75
ULS3	1.35	1.35	1.05	0.9	0	1.5
ULS4	1.35	1.35	1.5	0	0.9	0.75
ULS5	1.35	1.35	1.05	0	1.5	0.75
ULS6	1.35	1.35	1.05	0	0.9	1.5

For the accidental configuration, the load related to the earthquake E is split between the contribution on the x-axis E_x and on the y-axis E_y, and the coefficients used are:

Table 7: Seismic load combinations

Nomenclature	G_1	G_2	Q_1	E_x	E_y
Seismic LS1	1	1	0.3	1	0.3
Seismic LS2	1	1	0.3	-1	0.3
Seismic LS3	1	1	0.3	1	-0.3
Seismic LS4	1	1	0.3	-1	-0.3
Seismic LS5	1	1	0.3	0.3	1
Seismic LS6	1	1	0.3	-0.3	1
Seismic LS7	1	1	0.3	0.3	-1
Seismic LS8	1	1	0.3	-0.3	-1

3. MODELLING OF THE STRUCTURE

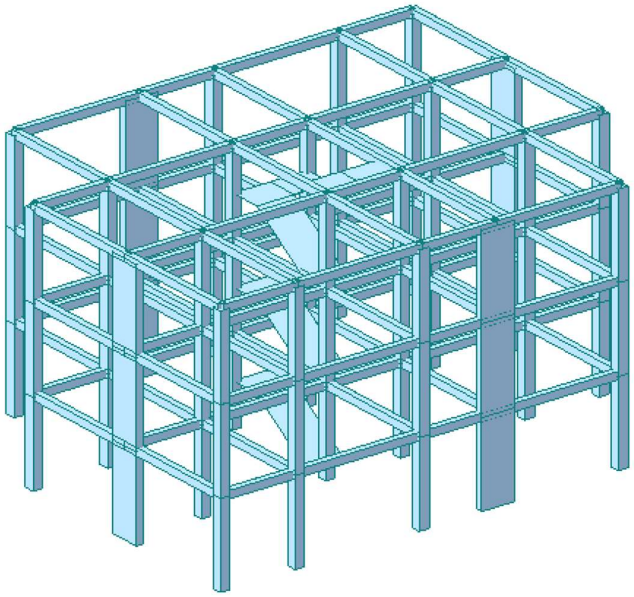

Figure 21: Midas model of the structure

The model was developed in the software MIDAS Gen considering the gravitational and seismic loads. Mainly comprising of Primary vertical elements and primary beams as the model is done for bi-directional (i.e.) two-way slab floor system.

The main characteristics of the model are detailed in the following section:

1. The code opted is EC08.
2. The foundation adopted is box foundation and hence fully restrained.
3. Rigid diaphragms were assigned to each floor of the structure to account for the floor stiffness.
4. Flat roof consideration is made.
5. The yield line theory was applied for the load transfer mechanism from slab to the beam and from the beam the load to mass conversion is applied for the imposed load and live load while the self-weight was converted using structure → structure-type → convert self-weight to mass
6. Two different models were elaborated, the first one consisting of shear wall as beam element and the second one with shear wall as wall element in the MIDAS
7. The 30% rule was considered to account for the orthogonal contributions in the seismic actions.

4. VERIFICATION OF THE DUAL SYSTEM (WALL EQUIVALENT DUAL SYSTEM)

The check was performed with RS_X (load combination 1).

Table 8: Base shear in columns

Column	V kN	Column	V kN	Column	V kN
C1	32.3	C9	42.6	C17	26.9
C2	389.7	C10	27.7	C18	30.9
C3	40	C11	33.3	C19	40.2
C4	29.8	C12	84.7	C20	29.7
C5	26.5	C13	42.9	C21	409.7
C6	30.5	C14	30.7	C22	18.6
C7	42.9	C15	43.1		
C8	26.6	C16	27	Total	1506.3

Shear walls are taking 60.904% of total base shear, leaving the remaining 39.096% to columns.

ASCE 7-02 specifies that the horizontal action taken by the “Moment Resisting Frame” must be greater than 25%.

Opting for “Wall-equivalent dual system” as per EC-8, the shear wall must have more than 50% of shear resistance at the building base of the total seismic resistance of the whole structural system.

Both criteria are verified here.

5. VERIFICATION OF THE PRIMARY AND SECONDARY MEMBERS

All structural members not designated as being secondary seismic members are taken as being primary seismic members. They are taken as being part of the lateral force resisting system, should be modelled in the structural analysis in accordance with 4.3.1 and designed and detailed for earthquake resistance in accordance with the rules of Sections 5 to 9.

In the above model the bi-directional floor system is considered hence all beams are primary beams and hence so the columns are primary vertical elements as all of them are involved in the lateral resisting system.

6. CRITERIA FOR STRUCTURAL REGULARITY

6.1. Regularity in plan

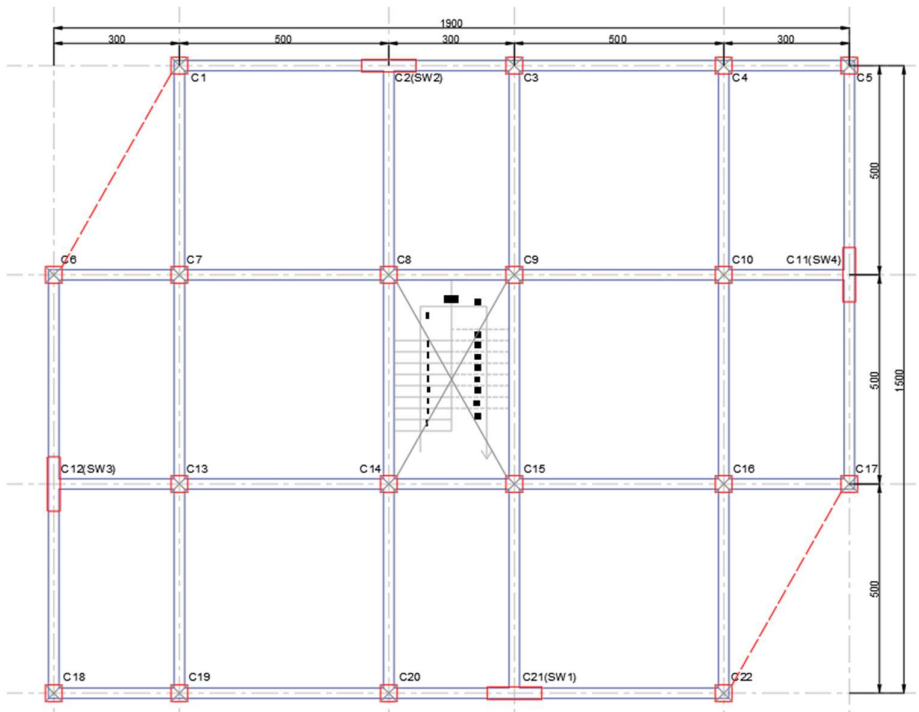

Figure 22: Plan configuration and polygonal convex line

The plan is approximately symmetrical in two orthogonal directions.

- Setback area: $A_{set} = \frac{3 \cdot 5}{2} = 7.5\ m^2$
- Polygon floor area: $A_{floor} = 255\ m^2$
- Regularity percentage: $\frac{A_{set}}{A_{floor}} * 100 = 2.94\%$

The regularity percentage obtained shows that each setback area is less than 5% of the floor area. It implies regularity in plan.

6.2. Torsional irregularity

Eccentricity and torsional radius should satisfy these conditions:

Analysis in direction Y

$$e_{0x} \leq 0.3\ r_x$$
$$r_x \geq\ l_s$$

Analysis in direction X

$$e_{0y} \leq 0.3\ r_y$$
$$r_y \geq\ l_s$$

The values of eccentricities are given in the following table:

Table 9: Eccentricities

Story	e_{0x} m	e_{0y} m
Roof	0.02	0.21
2F	0.04	0.02
1F	0.03	0.05

The torsional radius can be computed using the following formulas:

$$r_x = \sqrt{\frac{\Sigma(x_i^2 . K_{yi} + y_i^2 . K_{xi})}{\Sigma K_{yi}}} \qquad r_y = \sqrt{\frac{\Sigma(x_i^2 . K_{yi} + y_i^2 . K_{xi})}{\Sigma K_{xi}}}$$

$$r_x = 10.846 \qquad r_y = 10.846$$

The radius of gyration is determined by this formula:

$$l_s = \sqrt{\frac{L_x^2 + L_y^2}{12}} = 6.99m$$

Finally, the eccentricity ratios can be computed and compared to 0.3.

Table 10: Eccentricity ratios

Story	Direction Y e_{0x}/r_x	Direction X e_{0y}/r_y
Roof	0.0018	0.019
2	0.0037	0.0018
1	0.0028	0.0046

The above criteria are satisfied, hence the structure is torsionally regular.

6.3. Regularity in elevation

The mass and the stiffness of the structure remains constant from the base to the top of the construction.

The building does not have setbacks that reduce gradually. Hence the structure is regular in elevation.

7. BEAMS DESIGN ACCORDING TO EUROCODE 2

The beam's reinforcement design has to be done for the Ultimate Limit State (ULS). The reinforcement layout is required for a beam in the X and Y direction for each floor.

7.1. Static model and cross-section of the beam

The slab type considered is a slab on beams, so the beams can be considered as T- or L-shaped beams to take into account the slab contribution. In Eurocode 2, the effective flange width b_{eff} is defined in 5.3.2.1:

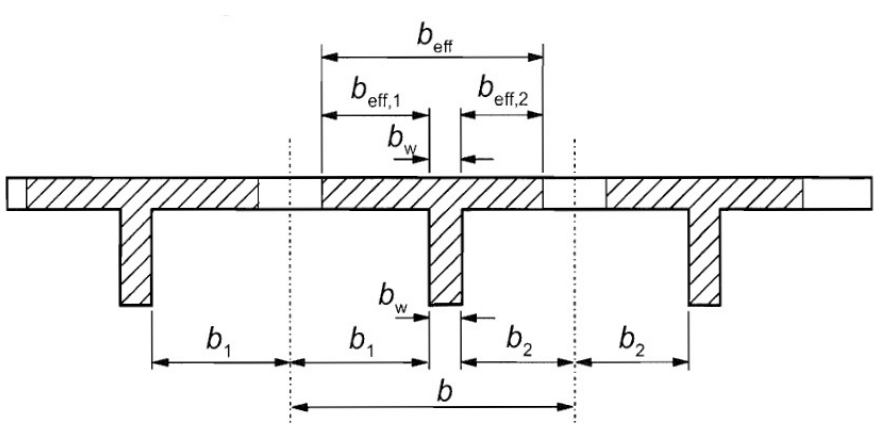

Figure 23: Definition of the effective flange width

It can be computed with the formula:

$$b_{eff} = \sum b_{eff,i} + b_w \leq b$$

$where\ b_{eff,i} = 0.2b_i + 0.1l_0 \leq 0.2l_0\ and\ b_{eff,i} \leq b_i$. l_0 is the distance between points of zero moment, that can be obtained from:

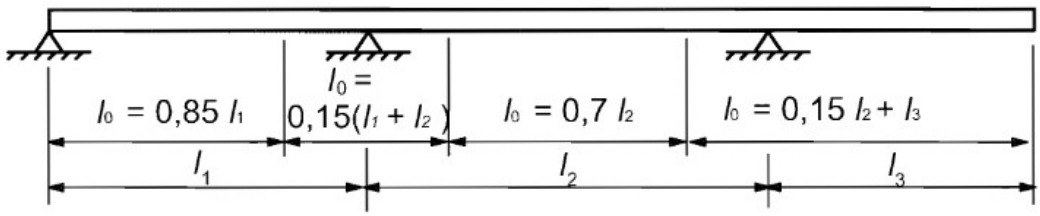

Figure 24: Distance between points of zero moment

The effective flange width is computed at each support and at the mid-span for each considered beam:

Table 11: b_{eff} of beam B's sections

Section -	l_0 (mm)	$b_{eff,1}$ (mm)	$b_{eff,2}$ (mm)	b_{eff} (mm)
B.a	4250	850	700	1800
B.ab	4250	850	700	1800
B.b	1500	300	300	850
B.bc	3500	700	700	1575
B.c	1500	300	300	550
B.cd	4250	850	850	1100
B.d	4250	850	847.5	1098

Table 12: b_{eff} of beam A's sections

Section -	l_0 (mm)	$b_{eff,1}$ (mm)	$b_{eff,2}$ (mm)	b_{eff} (mm)
A.a	3698	740	0	990
A.ab	3698	740	0	990
A.b-	3698	740	0	990
A.b+	1998	400	0	650
A.bc	1998	400	0	650
A.c	1103	221	0	471
A.cd	3500	700	0	950
A.d	1200	240	0	490
A.de	2550	510	0	760
A.e	2550	510	0	760

7.2. Bending reinforcement

The method used for the bending reinforcement is based on the simplified concrete design block, in accordance with EC2:

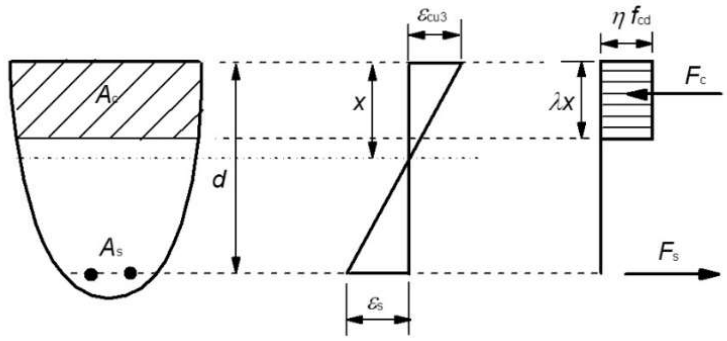

Figure 25: Simplified concrete design block

The area of steel needed for a cross section A_{sl} is derived from:

$$A_{sl} = \frac{1}{f_{yd}}\left(\frac{M_{Ed}}{z} + N_{Ed}\right)$$

With z the lever arm, which can be found using this formula:

$$\frac{z}{d} = 0.5(1 + \sqrt{1 - 2K})$$

And

$$K = \frac{M_{Ed}}{bd^2 f_{cd}}$$

This is valid only if the steel yields before the concrete crushes. To check this criterion, K', the limit value corresponding to the "balanced section" can be computed. K must be inferior to K'.

$$K' = \frac{M_{bal}}{bd^2 f_{cd}} = 0.295$$

According to EC2 9.2.1.1, the minimum and maximum sections of reinforcement are:

- $A_{s,min} = \min\left(0.26\frac{f_{ctm}}{f_{yk}} b_t d\ ;\ 0.0013 b_t d\right)$ for reinforcement in tension
- $A_{s,max} = 0.04\mathrm{A}_c$ for both reinforcement in tension and compression

Finally, using these formulas, the area of steel for each section is computed:

Table 13: Reinforcement details in bending for beam B

Section	M_{Ed}	K	A_{sl}	$A_{s,min}$	$A_{s,max}$
-	kN.m	-	mm²	mm²	mm²
B.a.1	-69.9	0.104	422.8		13800
B.ab.1	32.6	0.007	187.1	979.5	13800
B.b.1	-73.1	0.108	443.1		8100
B.bc.1	31.6	0.007	181.0	857.1	12450
B.c.1	-70.6	0.105	426.8		6300
B.cd.1	30.7	0.010	176.2	598.6	9600
B.d.1	-49.8	0.074	295.7		9585
B.a.2	-76.1	0.113	462.8		13800
B.ab.2	32.0	0.007	183.2	979.5	13800
B.b.2	-75.5	0.112	458.8		8100
B.bc.2	31.5	0.007	180.5	857.1	12450
B.c.2	-71.5	0.106	432.7		6300
B.cd.2	30.4	0.010	147.7	598.6	9600
B.d.2	-49.8	0.074	296.0		9585
B.a.3	-72.7	0.108	418.4		13800
B.ab.3	37.1	0.008	211.9	979.5	13800
B.b.3	-80.3	0.119	458.7		8100
B.bc.3	35.4	0.008	202.5	857.1	12450
B.c.3	-61.4	0.091	351.0		6300
B.cd.3	24.9	0.008	142.5	598.6	9600
B.d.3	-35.6	0.053	203.5		9585

Table 14: Reinforcement details in bending for beam A

Section	M_{Ed}	K	A_{sl}	$A_{s,min}$	$A_{s,max}$
-	kN.m	-	mm²	mm²	mm²
A.a.1	-55.2	0.082	329.2		8937
A.ab.1	30.6	0.011	176.0	538.5	8937
A.b-.1	-63.7	0.094	382.9		8937
A.b+.1	-18.3	0.027	106.1		6897
A.bc.1	7.2	0.004	41.1	353.5	6897
A.c.1	-57.9	0.086	346.7		5823
A.cd.1	31.0	0.012	178.1	517.0	8700
A.d.1	-59.7	0.088	357.6		5940
A.de.1	7.6	0.004	43.6	413.6	7560
A.e.1	-20.5	0.030	118.7		7560
A.a.2	-56.4	0.084	337.3		8937
A.ab.2	30.2	0.011	173.5	538.5	8937
A.b-.2	-63.2	0.094	380.0		8937
A.b+.2	-20.4	0.030	118.6		6897
A.bc.2	7.6	0.004	43.6	353.5	6897
A.c.2	-58.3	0.086	349.1		5823
A.cd.2	30.5	0.012	175.4	517.0	8700
A.d.2	-60.3	0.089	361.3		5940
A.de.2	7.9	0.004	45.5	413.6	7560
A.e.2	-22.5	0.033	130.7		7560
A.a.3	-55.2	0.082	315.1		8937
A.ab.3	30.6	0.010	175.0	538.5	8937
A.b-.3	-63.7	0.094	363.9		8937
A.b+.3	-18.3	0.027	106.1		6897
A.bc.3	7.2	0.004	41.1	353.5	6897
A.c.3	-57.9	0.086	346.7		5823
A.cd.3	31.0	0.012	178.1	517.0	8700
A.d.3	-59.7	0.088	357.6		5940
A.de.3	7.6	0.004	43.6	413.6	7560
A.e.3	-20.5	0.030	118.7		7560

7.3. Shear design

The procedure for shear resistance design according to EC2 (6.2) is following these steps:

- Computation of the shear resistance of the member without shear reinforcement $V_{Rd,c}$ and comparison with V_{Ed}. If $V_{Ed} \leq V_{Rd,c}$, no calculated shear reinforcement is necessary
- In region where $V_{Ed} \geq V_{Rd,c}$, it is mandatory to provide sufficient shear reinforcement so that $V_{Ed} \leq V_{Rd,s}$, with $V_{Rd,s}$ the shear force that can be sustained by the yielding shear reinforcement

$V_{Rd,c}$ can be computed using the formula:

$$V_{Rd,c} = \left[C_{Rd,c}k(100\rho_l f_{ck})^{\frac{1}{3}} + k_1\sigma_{cp}\right]b_w d$$

And a minimum of $V_{Rd,c} = (v_{min} + k_1\sigma_{cp})b_w d$

Where:

- $k = 1 + \sqrt{\frac{200}{d}} \leq 2.0$ with d in mm
- $\rho_l = \frac{A_{sl}}{b_w d} \leq 0.02$ with A_{sl} the area of tensile reinforcement
- b_w the smallest width of the cross-section
- $\sigma_{cp} = N_{Ed}/A_c < 0.2f_{cd}$

The values of $C_{Rd,c}$, v_{min} and k_1 are given in the National Annex:

- $C_{Rd,c} = 0.18/\gamma_c$
- $v_{min} = 0.0035k^{\frac{3}{2}} \cdot f_{ck}^{\frac{1}{2}}$
- $k_1 = 0.15$

For every beam, $V_{Rd,c} = V_{Rd,c,min} = 39.2\ kN$.

Table 15: Acting shear force in beam B

Section	V_{Ed} kN	Shear reinforcement needed?
B.a.1	78.8	Yes
B.ab.1	4.1	No
B.b.1	153.9	Yes
B.bc.1	4.9	No
B.c.1	149.2	Yes
B.cd.1	5.9	No
B.d.1	67.6	Yes
B.a.2	81.0	Yes
B.ab.2	6.2	No
B.b.2	152.8	Yes
B.bc.2	5.7	No
B.c.2	148.7	Yes
B.cd.2	6.2	No
B.d.2	67.5	Yes
B.a.3	63.0	Yes
B.ab.3	6.26	No
B.b.3	140.5	Yes
B.bc.3	5.1	No
B.c.3	165.3	Yes
B.cd.3	3.1	No
B.d.3	82.9	Yes

Table 16: Acting shear force in beam A

Section -	V_{Ed} kN	Shear reinforcement needed?
A.a.1	69.7	Yes
A.ab.1	3.1	No
A.b-.1	72.1	Yes
A.b+.1	33.6	No
A.bc.1	5.0	No
A.c.1	108.4	Yes
A.cd.1	1.6	No
A.d.1	107.7	Yes
A.de.1	2.6	No
A.e.1	34.7	No
A.a.2	70.1	Yes
A.ab.2	2.7	No
A.b-.2	72.8	Yes
A.b+.2	35.4	No
A.bc.2	3.2	No
A.c.2	106.6	Yes
A.cd.2	1.6	No
A.d.2	105.9	Yes
A.de.2	3.9	No
A.e.2	36.3	No
A.a.3	55.3	Yes
A.ab.3	3.02	No
A.b-.3	59.9	Yes
A.b+.3	24.7	No
A.bc.3	3.1	No
A.c.3	83.8	Yes
A.cd.3	1.0	No
A.d.3	84.8	Yes
A.de.3	2.5	No
A.e.3	24.0	No

In the cases where $V_{Ed} \geq V_{Rd,c}$, the shear resistance V_{Rd} is the smallest between:

$$V_{Rd,s} = \frac{A_{sw}}{s} \, z f_{ywd} \cot(\theta)$$

And

$$V_{Rd,max} = \frac{\alpha_{cw} b_w z v_1 f_{cd}}{\cot(\theta) + \tan(\theta)}$$

With:

- A_{sw} the cross-sectional area of the shear reinforcement
- s the spacing of the stirrups
- f_{ywd} the design yield strength of the shear reinforcement
- v_1 the strength reduction factor for concrete cracked in shear, it can be computed through $v_1 = 0.6\left[1 - \frac{f_{ck}}{250}\right]$
- $\alpha_{cw} = 1$ for non-prestressed structures
- θ is the compression strut angle, taken as 21.8° which is the minimum allowed in the Eurocode.

To find the ratio $\frac{A_{sw}}{s}$ that gives the shear reinforcement, $V_{Rd,s}$ and V_{Ed} are equalized:

$$V_{Rd,s} = V_{Ed} \Rightarrow \frac{A_{sw}}{s} = \frac{V_{Ed}}{z f_{ywd} \cot(\theta)}$$

The minimum value of the shear reinforcement that should be provided is:

$$a_{sw} = 0.08\frac{\sqrt{f_{ck}}}{f_{yk}}b_w$$

The maximum value of the shear reinforcement resistance $V_{Rd,max}$ should also be computed and compared to V_{Ed}.

$a_{sw} = 200\,mm^2/m$

$V_{Rd,max} = 281.1\,kN > V_{Ed}$ in every section.

Table 17: Shear reinforcement in beam B

Section -	$\frac{V_{Ed}}{zf_{ywd}\cot(\theta)}$ mm²/m	$\frac{A_{sw}}{s}$ mm²/m
B.a.1	200.1	200.1
B.ab.1		200
B.b.1	390.9	390.9
B.bc.1		200
B.c.1	378.9	378.9
B.cd.1		200
B.d.1	171.6	200
B.a.2	205.7	205.7
B.ab.2		200
B.b.2	388.1	388.1
B.bc.2		200
B.c.2	377.6	377.6
B.cd.2		200
B.d.2	171.4	200
B.a.3	160.0	200
B.ab.3		200
B.b.3	356.9	356.9
B.bc.3		200
B.c.3	420.0	420.0
B.cd.3		200
B.d.3	210.5	210.5

Table 18: Shear reinforcement in beam A

Section -	$\frac{V_{Ed}}{z f_{ywd} \cot(\theta)}$ mm²/m	$\frac{A_{sw}}{s}$ mm²/m
A.a.1	177.0	200
A.ab.1		200
A.b-.1	185.7	200
A.b+.1		200
A.bc.1		200
A.c.1	275.4	275.4
A.cd.1		200
A.d.1	273.5	273.5
A.de.1		200
A.e.1		200
A.a.2	177.9	200
A.ab.2		200
A.b-.2	184.8	200
A.b+.2		200
A.bc.2		200
A.c.2	270.8	270.8
A.cd.2		200
A.d.2	268.9	268.9
A.de.2		200
A.e.2		200
A.a.3	140.5	200
A.ab.3		200
A.b-.3	152.2	200
A.b+.3		200
A.bc.3		200
A.c.3	212.7	212.7
A.cd.3		200
A.d.3	215.5	215.5
A.de.3		200
A.e.3		200

For the layout design, the maximum longitudinal distance of the stirrups is specified in EC2 (9.2.2):

$$s_{l,max} = 0.75d(1 + \cot(\alpha))$$

With $\alpha = 90°$, the angle of the stirrups.

$$s_{l,max} = 301.9\ mm$$

8. COLUMNS DESIGN ACCORDING TO EUROCODE 2

The first step for the design of the columns is to check if the second order effects can be neglected or not (EC2: 5.8.2). A column is qualified as slender, meaning that the second order effects should be taken in the computation, if its slenderness λ is larger than a limit value λ_{lim}. The slenderness λ is computed using:

$$\lambda = \frac{l_0}{\sqrt{\left(\frac{I}{A}\right)}}$$

With:

- l_0 the effective height of the column
- I the moment of inertia
- A the cross-sectional area of the column

In this case, the columns are in an unbraced frame, and the effective heights l_0 have to be computed according to this.

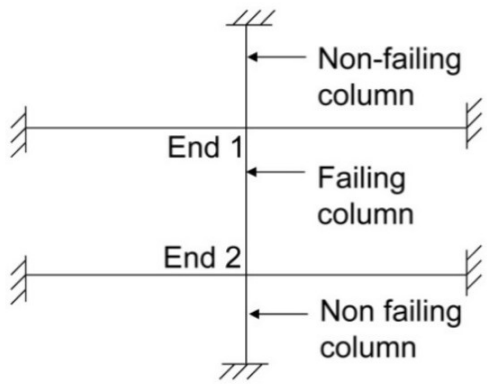

Figure 26: Determination of the effective column height

For unbraced frames, l_0 is given by the largest of:

$$l_0 = l\sqrt{1 + 10\frac{k_1 \cdot k_2}{k_1 + k_2}} \; and \; l_0 = l\left(1 + \frac{k_1}{1 + k_1}\right)\left(1 + \frac{k_2}{1 + k_2}\right)$$

With k_1 and k_2 are the relative spring stiffness at the ends of columns, and l the clear height of the columns between the end restraints. If the beams are symmetric and the same for the two stories, we can use:

$$k_1 = k_2 = \frac{\left(\frac{EI}{l}\right) column}{\left(\sum \frac{EI}{l}\right) beams}$$

The limit value λ_{lim} is computed with:

$$\lambda_{lim} = \frac{20ABC}{\sqrt{n}}$$

With $A = 0.7$, $B = 1.1$, $C = 0.7$ and $n = \frac{N_{Ed}}{A_c f_{cd}}$.

Finally, the computations are done for all the columns at each story:

Table 19: Slenderness of the columns

Column	λ	λ_{lim}	2nd order effects
	-	-	
I1	40.3	22.1	Yes
I2	50.5	27.5	Yes
I3	50.5	41.4	Yes
II1	40.4	21.45	Yes
II2	50.5	26.6	Yes
II3	50.5	39.3	Yes
III1	45.6	29.9	Yes
III2	65.4	37.1	Yes
III3	65.4	57.0	Yes
IV1	45.6	25.4	Yes
IV2	65.4	31.2	Yes
IV3	65.4	45.1	Yes

It is possible now to compute the bending moment due to the eccentricities:

$$M_{tot} = N_{Ed}(e_0 + e_i + e_2)$$

With e_0 the first order eccentricity, e_i the imperfection's eccentricity and e_2 the second order eccentricity. e_0 is given by (5.2):

$$e_0 = \max\,(b/20\,;20mm)$$

The imperfection's eccentricity e_i is computed with:

$$e_i = \frac{l_0}{400}$$

And the second order eccentricity e_2:

$$e_2 = K_\varphi K_r \frac{l_0^2}{\pi^2}\frac{\varepsilon_{yd}}{0.45d}$$

With:

- $K_\varphi = 1$
- $K_r = \frac{n_{ud}-n_{Ed}}{n_{ud}-n_{bal}} \leq 1.0$ with $n_{ud} = 1 + \frac{\rho f_{yd}}{f_{cd}}$, $n_{Ed} = \frac{N_{Ed}}{A_c f_{cd}}$, and $n_{bal} = 0.4$.

The column reinforcement is found using an interaction diagram, for a rectangular cross section. The diagram is used to find ω_{tot}, with $\mu_{Ed} = \frac{M_{Ed}}{bh^2 f_{cd}}$ on the x-axis and $v_{Ed} = \frac{N_{Ed}}{bhf_{cd}}$ on the y-axis.

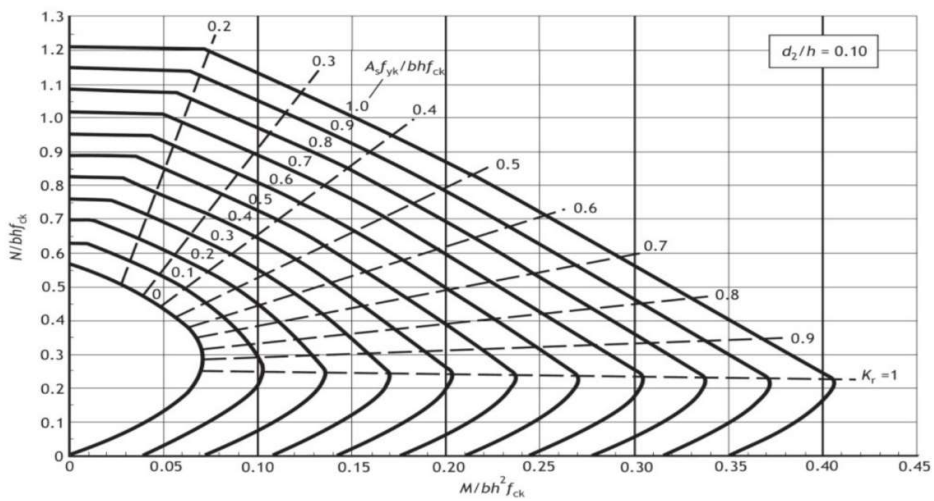

Figure 27: Reinforcement diagram

The total area of reinforcement can be finally computed:

$$A_{s,tot} = \omega_{tot}\frac{bhf_{cd}}{f_{yd}}$$

This value of the total area must be between the minimum and maximum values authorized by EC2 (9.5):

$$A_{s,min} = \frac{0.10N_{Ed}}{f_{yd}} \text{ and } A_{s,max} = 0.04A_c = 6400\ mm^2$$

In order to simplify the construction process of the columns on site, it has been chosen to provide the same reinforcement all along each column length, taking the maximum section of rebars computed along the stories:

Table 20: Bending reinforcement in columns

Column	N_{Ed}	M_{Ed}	ω_{tot}	$A_{s,tot}$	$A_{s,min}$	A_s
-	kN	kN.m	-	mm²	mm²	mm²
I	270.4	37.9	0.08	490.7	203.5	490.7
II	305.8	69.7	0.06	368	219.6	368
III	85.3	40.5	0.08	490.7	70.2	490.7
IV	192.2	76.3	0.11	674.8	133.1	674.8

The section's reinforcement has been computed in the most critical direction. The bending moment is approximately the same in the other direction, the same reinforcement is then provided.

8.1. Shear reinforcement

The design of the shear reinforcement is based on the same equations than for the beams:

Table 21: Shear reinforcement in columns

Column	N_{Ed}	V_{Ed}	$V_{Rd,c}$	a_{shear}
-	kN	kN	kN	mm²/m
I1	884.9	15.2	56.1	320
I2	575.1	24.3	56.1	320
I3	270.4	29.1	56.1	320
II1	954.7	12.5	56.2	320
II2	626.9	20.6	56.1	320
II3	305.8	25.8	56.1	320
III1	305.1	8.0	56.1	320
III2	195.37	14.1	56.1	320
III3	85.28	16.7	56.1	320
IV1	578.8	18.7	56.1	320
IV2	384.0	30.2	56.1	320
IV3	192.2	33.7	56.1	320

For every column, $V_{Ed} < V_{Rd,c}$. Therefore, only minimum reinforcement is needed.

The value for the steel sections will be later compared to the ones under seismic loads, and the greater value will be used for the design.

9. BEAMS DESIGN ACCORDING TO EUROCODE 8

9.1. Static model and cross-section of the beam

The effective width shall be taken as $b_{eff} = b_c + 2 \cdot 2h_f = 1000\ mm$

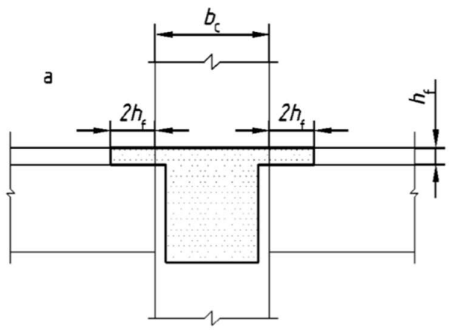

Figure 28: Effective width in primary seismic beams

9.2. Bending reinforcement

According to Eurocode 8, for bending, the procedure is the same as Eurocode 2, using values of moment from seismic analysis.

Table 22: Bending reinforcement in beam B under seismic loads

Section -	M_{Ed} kN.m	K	A_{sl} mm²	$A_{s,min}$ mm²	$A_{s,max}$ mm²
B.a.1	-83.2	0.123	509.0		9000
B.ab.1	20.9	0.008	119.7	979.5	9000
B.b.1	-82.7	0.122	505.5		9000
B.bc.1	19.4	0.007	111.5	857.1	9000
B.c.1	-85.3	0.126	523.0		9000
B.cd.1	21.2	0.008	121.8	598.6	9000
B.d.1	-78.4	0.116	477.3		9000
B.a.2	-97.0	0.144	601.0		9000
B.ab.2	20.4	0.008	117.0	979.5	9000
B.b.2	-94.6	0.140	585.1		9000
B.bc.2	19.4	0.007	111.1	857.1	9000
B.c.2	-96.1	0.142	595.2		9000
B.cd.2	21.0	0.008	120.4	598.6	9000
B.d.2	-89.4	0.132	549.7		9000
B.a.3	-83.6	0.124	511.5		9000
B.ab.3	22.5	0.008	129.1	979.5	9000
B.b.3	-83.5	0.124	511.3		9000
B.bc.3	20.4	0.008	117.0	857.1	9000
B.c.3	-76.4	0.113	464.4		9000
B.cd.3	16.5	0.006	94.5	598.6	9000
B.d.3	-66.8	0.099	402.7		9000

Table 23: Bending reinforcement in beam A under seismic loads

Section	M_{Ed}	K	A_{sl}	$A_{s,min}$	$A_{s,max}$
-	kN.m	-	mm²	mm²	mm²
A.a.1	-78.1	0.116	475.3		9000
A.ab.1	20.9	0.008	119.8	538.5	9000
A.b-.1	-82.8	0.123	506.1		9000
A.b+.1	-77.3	0.114	470.2		9000
A.bc.1	7.2	0.003	41.1	353.4	9000
A.c.1	-73.9	0.109	448.1		9000
A.cd.1	20.8	0.008	119.1	517.0	9000
A.d.1	-73.7	0.109	446.8		9000
A.de.1	6.3	0.002	35.9	413.6	9000
A.e.1	-69.2	0.103	418.3		9000
A.a.2	-85.2	0.126	522.1		9000
A.ab.2	20.6	0.008	118.2	538.5	9000
A.b-.2	-88.9	0.132	546.5		9000
A.b+.2	-88.9	0.132	546.5		9000
A.bc.2	7.2	0.003	41.4	353.4	9000
A.c.2	-61.8	0.092	371.2		9000
A.cd.2	20.4	0.008	117.2	517.0	9000
A.d.2	-81.3	0.120	496.3		9000
A.de.2	6.3	0.002	36.3	413.6	9000
A.e.2	-80.5	0.119	491.3		9000
A.a.3	-64.6	0.096	368.9		9000
A.ab.3	16.9	0.006	96.6	538.5	9000
A.b-.3	-73.1	0.108	417.9		9000
A.b+.3	-72.2	0.107	437.5		9000
A.bc.3	7.5	0.003	42.7	353.4	9000
A.c.3	-61.8	0.092	371.2		9000
A.cd.3	16.1	0.006	92.0	517.0	9000
A.d.3	-58.4	0.087	349.7		9000
A.de.3	4.7	0.002	27.1	413.6	9000
A.e.3	-57.4	0.085	343.0		9000

The required steel areas needed for EC2 and EC8 can be compared, and the diameters chosen. For reinforcement in tension, the required area of steel is the same for EC2 and EC8 because the minimum area of steel must be chosen.

Table 24: Comparison between EC2 and EC8 bending reinforcement in beam B

Section	Most critical	A_{sl} mm²	Diameter mm	Number of rebars -	$A_{sl,d}$ mm²
B.a.1	EC8	509.0	16	3 (top)	603.2
B.ab.1	EC2=EC8	979.5	22	3 (bottom)	1140.4
B.b.1	EC8	505.5	16	3 (top)	603.2
B.bc.1	EC2=EC8	857.1	20	3 (bottom)	942.5
B.c.1	EC8	523.0	16	3 (top)	603.2
B.cd.1	EC2=EC8	598.6	20	3 (bottom)	942.5
B.d.1	EC8	477.3	16	3 (top)	603.2
B.a.2	EC8	601.0	16	3 (top)	603.2
B.ab.2	EC2=EC8	979.5	22	3 (bottom)	1140.4
B.b.2	EC8	585.1	16	3 (top)	603.2
B.bc.2	EC2=EC8	857.1	20	3 (bottom)	942.5
B.c.2	EC8	595.2	16	3 (top)	603.2
B.cd.2	EC2=EC8	598.6	20	3 (bottom)	942.5
B.d.2	EC8	549.7	16	3 (top)	603.2
B.a.3	EC8	511.5	16	3 (top)	603.2
B.ab.3	EC2=EC8	979.5	22	3 (bottom)	1140.4
B.b.3	EC8	511.3	16	3 (top)	603.2
B.bc.3	EC2=EC8	857.1	20	3 (bottom)	942.5
B.c.3	EC8	464.4	16	3 (top)	603.2
B.cd.3	EC2=EC8	598.6	20	3 (bottom)	942.5
B.d.3	EC8	402.7	16	3 (top)	603.2

Table 25: Comparison between EC2 and EC8 bending reinforcement in beam A

Section	Most critical	A_{sl} mm²	Diameter mm	Number of rebars -	$A_{sl,d}$ mm²
A.a.1	EC8	475.3	14	4	615.8
A.ab.1	EC2=EC8	538.5	16	3	603.2
A.b-.1	EC8	506.1	14	4	615.8
A.b+.1	EC8	470.2	14	4	615.8
A.bc.1	EC2=EC8	353.4	16	3	603.2
A.c.1	EC8	448.1	14	4	615.8
A.cd.1	EC2=EC8	517.0	16	3	603.2
A.d.1	EC8	446.8	14	4	615.8
A.de.1	EC2=EC8	413.6	16	3	603.2
A.e.1	EC8	418.3	14	4	615.8
A.a.2	EC8	522.1	14	4	615.8
A.ab.2	EC2=EC8	538.5	16	3	603.2
A.b-.2	EC8	546.5	14	4	615.8
A.b+.2	EC8	546.5	14	4	615.8
A.bc.2	EC2=EC8	517.0	16	3	603.2
A.c.2	EC8	371.2	14	4	615.8
A.cd.2	EC2=EC8	517.0	16	3	603.2
A.d.2	EC8	496.3	14	4	615.8
A.de.2	EC2=EC8	413.6	16	3	603.2
A.e.2	EC8	491.3	14	4	615.8
A.a.3	EC8	368.9	12	4	452.4
A.ab.3	EC2=EC8	538.5	16	3	603.2
A.b-.3	EC8	417.9	12	4	452.4
A.b+.3	EC8	437.5	12	4	452.4
A.bc.3	EC2=EC8	517.0	16	3	603.2
A.c.3	EC8	371.2	12	4	452.4
A.cd.3	EC2=EC8	517.0	16	3	603.2
A.d.3	EC2	357.6	12	4	452.4
A.de.3	EC2=EC8	413.6	16	3	603.2
A.e.3	EC8	343.0	12	4	452.4

Finally:

Table 26: Bending reinforcement details in beams

Beam	Number of rebars at the top -	Diameter at the top mm	Number of rebars at the bottom -	Diameter at the bottom mm
B.ab.1	3	16	3	22
B.bc.1/ B.cd.1	3	16	3	20
B.ab.2	3	16	3	22
B.bc.2/ B.cd.2	3	16	3	20
B.ab.3	3	16	3	22
B.bc.3/ B.cd.3	3	16	3	20
A.1	4	14	3	16
A.2	4	14	3	16
A.3	4	14	3	16

9.3. Shear design

According to Eurocode 8, for bending, the procedure is the same as Eurocode 2, using values of moment from seismic analysis, except that the acting shear force V_{Ed} shall be determined in accordance with the capacity design rule.

$$V_{Ed,seismic} = \frac{\sum M_{Rb}}{l_{cl}} + V_{Ed}$$

With $\sum M_{Rb} = M_{Rb,1} + M_{Rb,2}$ and $M_{Rb,i}$ the design value of the beam moment of resistance at end i.

$$M_{Rb,i} = A_s \cdot f_{yd} \cdot \left(d - \frac{x}{2}\right) \text{ with } x = \frac{A_s \cdot f_{yd}}{0.85 b f_{cd}}$$

For every beam, $V_{Rd,c} = V_{Rd,c,min} = 39.2\ kN$.

Table 27: Acting shear force due to seismic loading in beam B

Section -	V_{Ed} kN	$V_{Ed,seismic}$ kN	Shear reinforcement needed?
B.a.1	64.4	105.7	Yes
B.ab.1	17.7	59.0	Yes
B.b.1	127.6	168.8	Yes
B.bc.1	17.5	58.8	Yes
B.c.1	128.4	169.6	Yes
B.cd.1	18.9	60.2	Yes
B.d.1	63.0	104.2	Yes
B.a.2	69.8	111.0	Yes
B.ab.2	23.1	64.4	Yes
B.b.2	135.5	176.7	Yes
B.bc.2	22.3	63.5	Yes
B.c.2	136.6	177.9	Yes
B.cd.2	23.2	64.4	Yes
B.d.2	67.3	108.6	Yes
B.a.3	65.4	106.6	Yes
B.ab.3	17.5	58.8	Yes
B.b.3	130.3	171.6	Yes
B.bc.3	17.6	58.8	Yes
B.c.3	116.6	157.8	Yes
B.cd.3	19.7	61.0	Yes
B.d.3	49.7	91.0	Yes

Table 28: Acting shear force due to seismic loading in beam A

Section -	V_{Ed} kN	$V_{Ed,seismic}$ kN	Shear reinforcement needed?
A.a.1	63.3	111.6	Yes
A.ab.1	17.5	65.8	Yes
A.b-.1	64.8	106.9	Yes
A.b+.1	64.7	154.2	Yes
A.bc.1	41.8	90.2	Yes
A.c.1	126.3	215.9	Yes
A.cd.1	14.2	103.7	Yes
A.d.1	125.2	214.8	Yes
A.de.1	40.9	130.4	Yes
A.e.1	60.4	150.0	Yes
A.a.2	66.0	114.4	Yes
A.ab.2	19.8	68.2	Yes
A.b-.2	67.2	109.3	Yes
A.b+.2	72.7	162.3	Yes
A.bc.2	49.8	98.2	Yes
A.c.2	100.5	190.1	Yes
A.cd.2	17.1	106.6	Yes
A.d.2	133.6	223.2	Yes
A.de.2	46.3	135.9	Yes
A.e.2	68.2	157.7	Yes
A.a.3	50.0	85.8	Yes
A.ab.3	17.5	53.2	Yes
A.b-.3	52.3	83.5	Yes
A.b+.3	54.4	120.6	Yes
A.bc.3	39.0	74.8	Yes
A.c.3	100.5	166.7	Yes
A.cd.3	11.8	78.0	Yes
A.d.3	96.5	162.7	Yes
A.de.3	34.4	100.6	Yes
A.e.3	47.0	113.2	Yes

$a_{sw} = 200\, mm^2/m$
$V_{Rd,max} = 281{,}1\, kN > V_{Ed}$ in every section.

Table 29: Required shear reinforcement due to seismic loading in beam B

Section -	$\frac{V_{Ed}}{z f_{ywd} \cot(\theta)}$ mm²/m	$\frac{A_{sw}}{s}$ mm²/m
B.a.1	268.3	268.3
B.ab.1	149.8	200
B.b.1	428.7	428.7
B.bc.1	149.2	200
B.c.1	430.8	430.8
B.cd.1	152.8	200
B.d.1	264.8	264.8
B.a.2	282.0	282.0
B.ab.2	163.4	200
B.b.2	448.9	448.9
B.bc.2	161.3	200
B.c.2	451.8	451.8
B.cd.2	163.6	200
B.d.2	275.7	275.7
B.a.3	270.8	270.8
B.ab.3	149.2	200
B.b.3	435.7	435.7
B.bc.3	149.4	200
B.c.3	400.8	400.8
B.cd.3	154.8	200
B.d.3	231.0	231.0

Table 30: Required shear reinforcement due to seismic loading in beam A

Section -	$\frac{V_{Ed}}{z f_{ywd} \cot(\theta)}$ mm²/m	$\frac{A_{sw}}{s}$ mm²/m
A.a.1	238.5	238.5
A.ab.1	167.2	200
A.b-.1	271.5	271.5
A.b+.1	391.7	391.7
A.bc.1	229.1	229.1
A.c.1	548.3	548.3
A.cd.1	263.4	263.4
A.d.1	545.4	545.4
A.de.1	331.2	331.2
A.e.1	380.9	380.9
A.a.2	290.5	290.5
A.ab.2	173.1	200
A.b-.2	277.5	277.5
A.b+.2	412.2	412.2
A.bc.2	249.3	249.3
A.c.2	482.8	482.8
A.cd.2	270.7	270.7
A.d.2	566.7	566.7
A.de.2	345.1	345.1
A.e.2	400.5	400.5
A.a.3	217.9	217.9
A.ab.3	135.2	200
A.b-.3	211.9	211.9
A.b+.3	306.3	306.3
A.bc.3	189.8	200
A.c.3	423.5	423.5
A.cd.3	198.1	198.1
A.d.3	413.2	413.2
A.de.3	255.5	255.5
A.e.3	287.6	287.6

The required steel areas needed for EC2 and EC8 can be compared, and the diameters and spacings chosen.

The diameter can be taken equal to 8mm everywhere.

The spacing has to be larger than $s_{l,max} = 301.9\ mm$.

Table 31: Comparison between shear reinforcement in EC2 and EC8 in beam B

Section -	Most critical	$\frac{A_{sw}}{s}$ mm²	s mm	$\frac{A_{sw,d}}{s}$ mm²
B.a.1	EC8	268.3	300	335.1
B.ab.1	EC2=EC8	200	300	335.1
B.b.1	EC8	428.7	230	437.1
B.bc.1	EC2=EC8	200	300	335.1
B.c.1	EC8	430.8	230	437.1
B.cd.1	EC2=EC8	200	300	335.1
B.d.1	EC8	264.8	300	335.1
B.a.2	EC8	282.0	300	335.1
B.ab.2	EC2=EC8	200	300	335.1
B.b.2	EC8	448.9	220	457.0
B.bc.2	EC2=EC8	200	300	335.1
B.c.2	EC8	451.8	220	457.0
B.cd.2	EC2=EC8	200	300	335.1
B.d.2	EC8	275.7	300	335.1
B.a.3	EC8	270.8	300	335.1
B.ab.3	EC2=EC8	200	300	335.1
B.b.3	EC8	435.7	230	437.1
B.bc.3	EC2=EC8	200	300	335.1
B.c.3	EC2	420.0	200	502.7
B.cd.3	EC2=EC8	200	300	335.1
B.d.3	EC8	231.0	300	335.1

Table 32: Comparison between shear reinforcement in EC2 and EC8 in beam A

Section -	Most critical	$\frac{A_{sw}}{s}$ mm²	s mm	$\frac{A_{sw,d}}{s}$ mm²
A.a.1	EC8	238.5	300	335.1
A.ab.1	EC2=EC8	200	300	335.1
A.b-.1	EC8	271.5	300	335.1
A.b+.1	EC8	391.7	250	402.1
A.bc.1	EC8	229.1	300	335.1
A.c.1	EC8	548.3	180	558.5
A.cd.1	EC8	263.4	300	335.1
A.d.1	EC8	545.4	180	558.5
A.de.1	EC8	331.2	300	335.1
A.e.1	EC8	380.9	250	402.1
A.a.2	EC8	290.5	300	335.1
A.ab.2	EC2=EC8	200	300	335.1
A.b-.2	EC8	277.5	300	335.1
A.b+.2	EC8	412.2	240	418.9
A.bc.2	EC8	249.3	300	335.1
A.c.2	EC8	482.8	200	502.7
A.cd.2	EC8	270.7	300	335.1
A.d.2	EC8	566.7	170	591.4
A.de.2	EC8	345.1	280	359.0
A.e.2	EC8	400.5	250	402.1
A.a.3	EC8	217.9	300	335.1
A.ab.3	EC2=EC8	200	300	335.1
A.b-.3	EC8	211.9	300	335.1
A.b+.3	EC8	306.3	300	335.1
A.bc.3	EC2=EC8	200	300	335.1
A.c.3	EC8	423.5	230	437.1
A.cd.3	EC8	198.1	300	335.1
A.d.3	EC8	413.2	240	418.9
A.de.3	EC8	255.5	300	335.1
A.e.3	EC8	287.6	300	335.1

Finally, the most critical value is taken for each span:

Table 33: Shear reinforcement details of beams

Beam	Diameter mm	Spacing mm
B.ab.1	8	230
B.bc.1	8	230
B.cd.1	8	230
B.ab.2	8	220
B.bc.2	8	220
B.cd.2	8	220
B.ab.3	8	230
B.bc.3	8	200
B.cd.3	8	200
A.ab.1	8	300
A.bc.1	8	180
A.cd.1	8	180
A.de.1	8	180
A.ab.2	8	300
A.bc.2	8	200
A.cd.2	8	170
A.de.2	8	170
A.ab.3	8	300
A.bc.3	8	230
A.cd.3	8	230
A.de.3	8	240

9.4. Local ductility requirements (EC8: 5.4.3.1.2)

Critical regions have to be considered up to a distance l_{cr} from the end cross-section with: $l_{cr} = h_w = 300\ mm$.

In these regions, the curvature ductility factor μ_ϕ must be at least equal to:

$$\begin{cases} \mu_\phi = 2q_0 - 1 & if\ T_1 \geq T_C \\ \mu_\phi = 1 + 2(q_0 - 1)\frac{T_C}{T_1} & if\ T_1 < T_C \end{cases}$$

This requirement is satisfied if the two following conditions are met:

- Compression reinforcement should be not less than half of the tension reinforcement, in addition of the compression reinforcement needed for the ULS verification.
- The area of reinforcement ρ should be less than:

  $\rho_{max} = \rho' + \frac{0.0018}{\mu_\phi \varepsilon_{sy,d}} \cdot \frac{f_{cd}}{f_{yd}}$ with $\rho = \frac{A_s}{bd}$; $\rho' = \frac{A_s'}{bd}$

Moreover, the area of reinforcement ρ should be more than: $\rho_{min} = 0.5\left(\frac{f_{ctm}}{f_{yk}}\right)$

Here are the values of reinforcement which must be checked for our design:

Table 34: Checks for local ductility in beams

Beam -	Top	Bottom	ρ' -	ρ -	ρ_{min} -	ρ_{max} -	Check
B.ab.1	$3\phi16$	$3\phi22$	0.28%	0.15%	0.26%	0.72%	Not ok
B.bc.1/B.cd.1	$3\phi16$	$3\phi20$	0.28%	0.15%	0.26%	0.72%	Not ok
B.ab.2	$3\phi16$	$3\phi22$	0.28%	0.15%	0.26%	0.72%	Not ok
B.bc.2/B.cd.2	$3\phi16$	$3\phi20$	0.28%	0.15%	0.26%	0.72%	Not ok
B.ab.3	$3\phi16$	$3\phi22$	0.28%	0.15%	0.26%	0.72%	Not ok
B.bc.3/B.cd.3	$3\phi16$	$3\phi20$	0.28%	0.15%	0.26%	0.72%	Not ok
A.1	$4\phi14$	$3\phi16$	0.15%	0.15%	0.26%	0.59%	Not ok
A.2	$4\phi14$	$3\phi16$	0.15%	0.15%	0.26%	0.59%	Not ok
A.3	$4\phi12$	$3\phi16$	0.15%	0.15%	0.26%	0.59%	Not ok

Additional reinforcement should be provided at top and bottom in the critical length:

Table 35: Additional reinforcement in beam's critical regions

Beam -	Additional steel (top)	Additional steel (bottom)	ρ' -	ρ -	ρ_{min} -	ρ_{max} -	Check
B.ab.1	$2\phi18$	$2\phi20$	0.44%	0.28%	0.26%	0.88%	Ok
B.bc.1/B.cd.1	$2\phi18$	$2\phi20$	0.39%	0.28%	0.26%	0.88%	Ok
B.ab.2	$2\phi18$	$2\phi20$	0.44%	0.28%	0.26%	0.88%	Ok
B.bc.2/B.cd.2	$2\phi18$	$2\phi20$	0.39%	0.28%	0.26%	0.88%	Ok
B.ab.3	$2\phi18$	$2\phi20$	0.44%	0.28%	0.26%	0.88%	Ok
B.bc.3/B.cd.3	$2\phi18$	$2\phi20$	0.39%	0.28%	0.26%	0.88%	Ok
A.1	$3\phi14$	$2\phi20$	0.31%	0.27%	0.26%	0.75%	Ok
A.2	$3\phi16$	$2\phi20$	0.31%	0.30%	0.26%	0.75%	Ok
A.3	$3\phi18$	$2\phi20$	0.31%	0.30%	0.26%	0.75%	Ok

In critical regions, hoops should be provided following these conditions:

- Diameter of the hoops $d_{bw} \geq 6\ mm$
- The first hoop shall be placed not more than 50mm from the beam end section
- Spacing of hoops $s \leq s_{max} = \min\left\{\frac{h_w}{4}; 24d_{bw}; 225mm; 8d_{bL}\right\}$

  where d_{bl} is the minimum longitudinal bar diameter and h_w is the beam height.

$d_{bw} = 8mm \geq 6mm$

The smallest longitudinal bar diameter is $d_{bL} = 12\ mm$.

$$\begin{cases} \frac{h_w}{4} = \frac{300}{4} = 75\ mm \\ 24d_{bw} = 24 \cdot 8 = 192\ mm \\ 8d_{bL} \geq 8 \cdot 12 = 96\ mm \end{cases} \Rightarrow s_{max} = 75\ mm$$

Therefore, spacing s should be reduced to 75 mm in critical regions.

Moreover, to prevent bond failure of longitudinal bars in beams-column joints, the diameter of the rebars d_{bL} should be limited to:

$$\frac{d_{bL}}{h_c} \leq \frac{7.5 \cdot f_{ctm}}{\gamma_{Rd} \cdot f_{yd}} \cdot \frac{1+0.8 \cdot v_d}{1+0.75 k_d \cdot \rho'/\rho_{max}} \text{ for interior beam-column joints}$$

$$\frac{d_{bL}}{h_c} \leq \frac{7.5 \cdot f_{ctm}}{\gamma_{Rd} \cdot f_{yd}} \cdot (1 + 0.8 \cdot v_d) \text{ for exterior beam-column joints}$$

With:

- h_c the width of the column
- γ_{Rd} the model uncertainty factor on the design value of resistances, equals to 1.0 in DCM
- v_d the normalized design axial force in the column
- k_d the factor reflecting the ductility class, equal to 2/3 for DCM
- ρ' the compression steel ratio of the beams bar passing through the joint
- ρ_{max} the maximum allowed tension steel ratio

The check is here performed on joints between the designed beams and columns.

Table 36: Maximum diameter of longitudinal bars in beam-column joints

Column-beam joint	v_d -	d_{bL} mm
I1-B.c.1	0.239	17.3
I2-B.c.2	0.154	16.3
I3-B.c.3	0.068	15.3
II1-B.b.1	0.253	17.5
II2-B.b.2	0.164	16.4
II3-B.b.3	0.075	15.4
III1-A.e.1	0.130	19.8
III2-A.e.2	0.085	19.2
III3-A.e.3	0.036	18.5
IV1-A.c.1	0.180	20.5
IV2-A.c.2	0.120	19.7
IV3-A.c.3	0.057	18.8

The check is fulfilled for joints with exterior columns (with beams A) because the maximum diameter is $d_{bL} = 16mm$ in these beams. For the joints with interior columns (beams B), according to the code, longitudinal bars passing through joints shall terminate in the members framing into the joint at a distance not less than l_{cr} from the face of the joint.

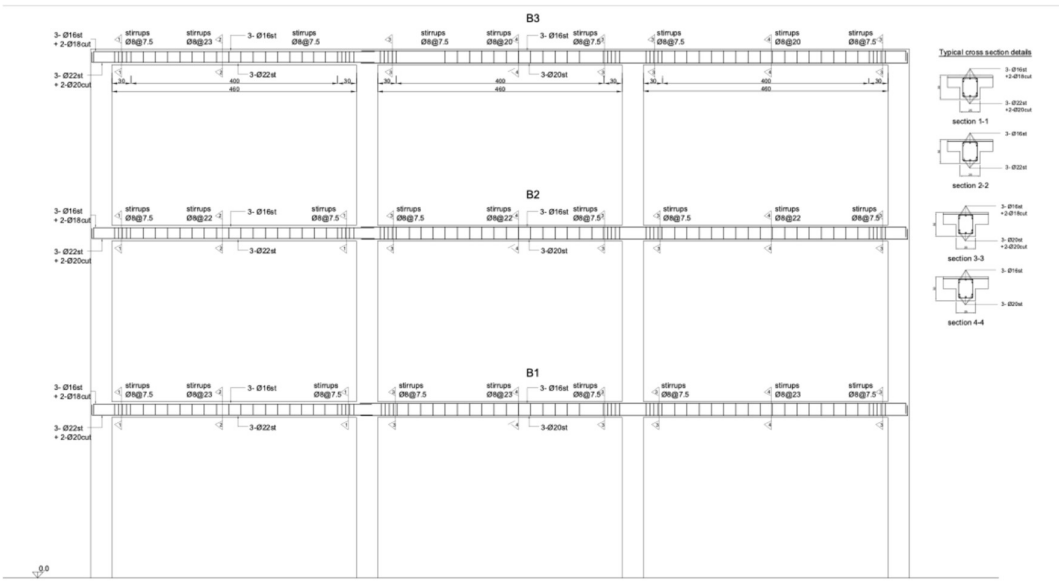

Figure 29: Beams B reinforcement

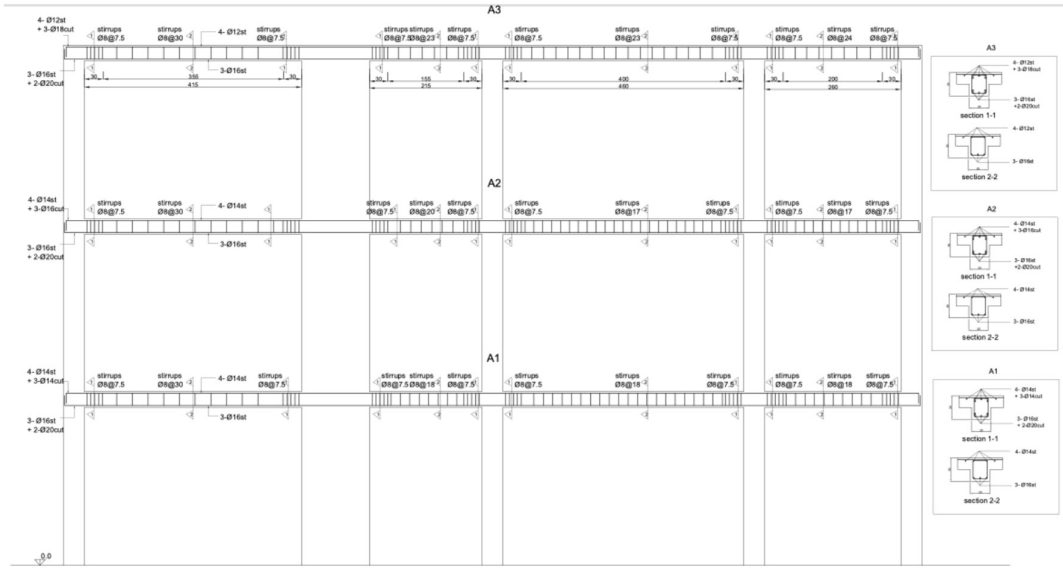

Figure 30: Beams A reinforcement

10. COLUMNS DESIGN ACCORDING TO EUROCODE 8

According to Eurocode 8 5.4.3.2.1, the flexural and shear resistance of the columns should be computed following the Eurocode 2, using the value of the axial force from the analysis in the seismic situation. Biaxial bending can be taken into account in a simplified way by verification separately in each direction, by reducing the value of the moment of resistance of 30%.

The same procedure than for EC2 is used with the internal forces computed with the seismic load combinations. The section's reinforcement is computed in the most critical zone of every column:

Table 37: Bending reinforcement in columns for seismic loads

Column	N_{Ed}	M_{Ed}	ω_{tot}	$A_{s,tot}$	$A_{s,min}$	A_s
-	kN	kN.m	-	mm²	mm²	mm²
I	181.2	167.1	0.38	2330.7	146.5	2330.7
II	200.7	172.3	0.37	2269.3	155.0	2269.3
III	95.25	108.5	0.33	1717.3	79.8	1717.3
IV	152.1	162.6	0.35	2146.7	110.6	2146.7

It is now possible to compare the section needed for both EC2 and EC8 and choose the most critical one:

Table 38: Comparison of bending reinforcement between EC2 and EC8

Column	A_s EC2 mm²	A_s EC8 mm²	Most critical
I	490.7	2330.7	EC8
II	368	2269.3	EC8
III	490.7	1717.3	EC8
IV	674.8	2146.7	EC8

The seismic load combinations are giving the most critical value for the steel reinforcement. The details for the longitudinal reinforcement can be chosen:

Table 39: Bending reinforcement details in columns

Column	A_s	Diameter of the rebars	Number of rebars on each side	$A_{s,d}$
-	mm²	mm	-	mm²
I	2330.7	20	4	2513.3
II	2269.3	22	3	2280.8
III	1717.3	20	3	1884.9
IV	2146.7	22	3	2280.8

The section's reinforcement has been computed in the most critical direction. The bending moment is approximately the same in the other direction, the same reinforcement is then provided.

10.1. Shear reinforcement:

The same procedure than for EC2 is used with the internal forces computed with the seismic load combinations. There is however a change in the computation of V_{Ed} in the seismic case:

$$V_{Ed} = 1.1\frac{\sum M_{Rc}^{ends}}{l_{cl}}$$

With $\sum M_{Rc}^{ends} = M_{Rc,1} + M_{Rc,2}$ that are the design value of the column moment of resistance at end i.

$$M_{Rc,i} = A_{s,d} \cdot f_{yd} \cdot \left(d - \frac{A_{s,d} \cdot f_{yd}}{2 \cdot 0.85 b f_{cd}}\right)$$

In this case, the reinforcement is the same for all along the column, then $M_{Rc,1} = M_{Rc,2}$. The shear capacity and the corresponding section of steel can be computed:

Table 40: Shear reinforcement in columns due to seismic loads

Column	M_{Rc}	V_{Ed}	$V_{Rd,c}$	Need for shear reinforcement?	a_{sw}
	kN.m	kN	kN		mm²/m
I	332	240.1	56.1	Yes	613.5
II	310	224.3	56.1	Yes	573.1
III	269	194.3	56.1	Yes	496.7
IV	310	224.3	56.1	Yes	573.1

It is possible to compare the section to the one computed according to EC2:

Table 41: Comparison of shear reinforcement between EC2 and EC8

Column	a_{sw} EC2	a_{sw} EC8	Most critical
	mm²	mm²	
I	320	613.5	EC8
II	320	573.1	EC8
III	320	496.7	EC8
IV	320	573.1	EC8

It should be then designed to support the seismic loads, in the non-critical sections:

Table 42: Shear reinforcement details in non-critical regions of columns

Column	a_{sw}	Maximum spacing	Spacing chosen	A_s	Diameter of the rebars	Number of rebars	$A_{s,d}$
	mm²/m	m	m	mm²	mm	-	mm²
I	613.5	0.4	0.16	98.2	8	2	100.5
II	573.1	0.4	0.16	91.7	8	2	100.5
III	496.7	0.4	0.16	79.5	8	2	100.5
IV	573.1	0.4	0.16	91.7	8	2	100.5

Some checks on the bending behavior of column should be verified. First, the total longitudinal ratio ρ_l should be larger than 0,01 and smaller than 0,04 (5.4.3.2.2). Secondly, the value of the normalized axial force $v_d = N_{Ed}/A_c f_{cd}$ should be smaller than 0.65:

Table 43: Additional checks in the columns

Column	$\boldsymbol{\rho_l}$ -	Check verified?	$\boldsymbol{v_d}$ -	Check verified?
I	0.0236	Yes	0.239	Yes
II	0.0190	Yes	0.253	Yes
III	0.0157	Yes	0.130	Yes
IV	0.0190	Yes	0.180	Yes

All these checks are verified in all columns.

10.2. Critical sections:

In case of primary seismic columns, the zones near both end sections are considered as critical sections, where the plastic hinges are occurring, and have to be reinforced in consequence. The length of the critical region l_{cr} is computed with the expression (5.4.3.2.2):

$$l_{cr} = max\{h_c; l_{cl}/6\,; 0.45\}$$

Where:

- h_c is the largest cross-sectional dimension of the column
- l_{cl} is the clear length of the column

If $l_{cl}/h_c < 3$, the entire height of the column has to be considered being a critical region.

Table 44: Length of critical regions in columns

Column	$\boldsymbol{h_c}$ m	$\boldsymbol{l_{cl}}$ m	$\boldsymbol{l_{cl}/h_c}$ -	$\boldsymbol{l_{cr}}$ m
I	0.4	3.04	7.6	0.507
II	0.4	3.04	7.6	0.507
III	0.4	3.04	7.6	0.507
IV	0.4	3.04	7.6	0.507

The value of the curvature ductility factor μ_ϕ has to be check in the critical regions at region base. It should verify:

$$\alpha\omega_{wd} \geq 30\mu_\phi v_d \varepsilon_{sy,d}\frac{b_c}{b_o} - 0{,}035$$

With:

- $\omega_{wd} = \frac{volume\ of\ confining\ hoops}{volume\ of\ concrete\ core} \cdot \frac{f_{yd}}{f_{cd}}$
- v_d the normalized design axial force
- $\varepsilon_{sy,d}$ the design value of tension steel strain at yield
- b_c the gross cross-sectional width
- b_o the width of confined core
- α the confinement effectiveness factor, equals to $\alpha = \alpha_n \cdot \alpha_s$, with
  $\alpha_n = 1 - \sum_n b_i^2/6\,b_o^2$ and $\alpha_s = (1 - s/2b_o)^2$

To verify this equation, ties with a minimum diameter of 6 mm have to be inserted in the shear reinforcement, in order to increase ω_{wd}. In the case of the column I, the ties used are rectangular, for columns II, III and IV, the ties used are diamond-shaped, all of them with a diameter of 8mm:

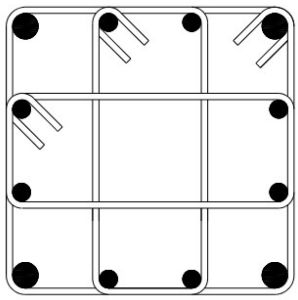

Figure 31: Ties in column I's base

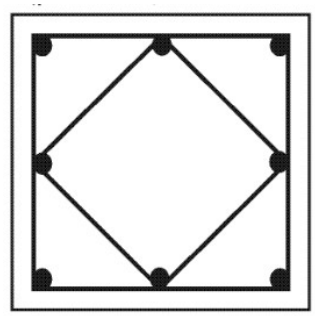

Figure 32: Ties in columns II, III, and IV's base

The minimum value for ω_{wd} is 0.08 in the critical region at the base of the primary seismic column.

In the critical region, the spacing s of the hoops should not exceed:

$s = min\{b_o/2\,; 175; 8d_{bL}\}$ in mm

With d_{bL} the minimum diameter of the longitudinal bars (in mm).

The details for the reinforcement of the critical region at the base of each story are:

Table 45: Reinforcement in the critical region at the base of columns

Column	Maximum spacing m	$\boldsymbol{s}$ m	Ties	$\boldsymbol{\omega_{wd}}$ -	$\boldsymbol{\alpha\omega_{wd}}$ -	$\boldsymbol{30\mu_\phi v_d \varepsilon_{sy,d} \frac{b_c}{b_o} - 0.035}$	Check verified?
I1	0.165	0.12	Rectangular	0.31	0.162	0.101	Yes
I2	0.165	0.12	Rectangular	0.31	0.162	0.053	Yes
I3	0.165	0.12	Rectangular	0.31	0.162	0.004	Yes
II1	0.16	0.12	Diamond	0.26	0.131	0.109	Yes
II2	0.16	0.12	Diamond	0.26	0.131	0.059	Yes
II3	0.16	0.12	Diamond	0.26	0.131	0.008	Yes
III1	0.165	0.12	Diamond	0.26	0.131	0.039	Yes
III2	0.165	0.12	Diamond	0.26	0.131	0.013	Yes
III3	0.165	0.12	Diamond	0.26	0.131	0.001	Yes
IV1	0.16	0.12	Diamond	0.26	0.131	0.07	Yes
IV2	0.16	0.12	Diamond	0.26	0.131	0.033	Yes
IV3	0.16	0.12	Diamond	0.26	0.131	0.001	Yes

With this specified design, the ductility of the critical section is ensured.

10.3. Beam-column joint

According to 5.4.3.3 of EC8, the horizontal reinforcement in joints seismic beams with columns shouldn't smaller than the one specified for the critical regions at the base of columns. Therefore, the reinforcement of this region is extended to the nodes.

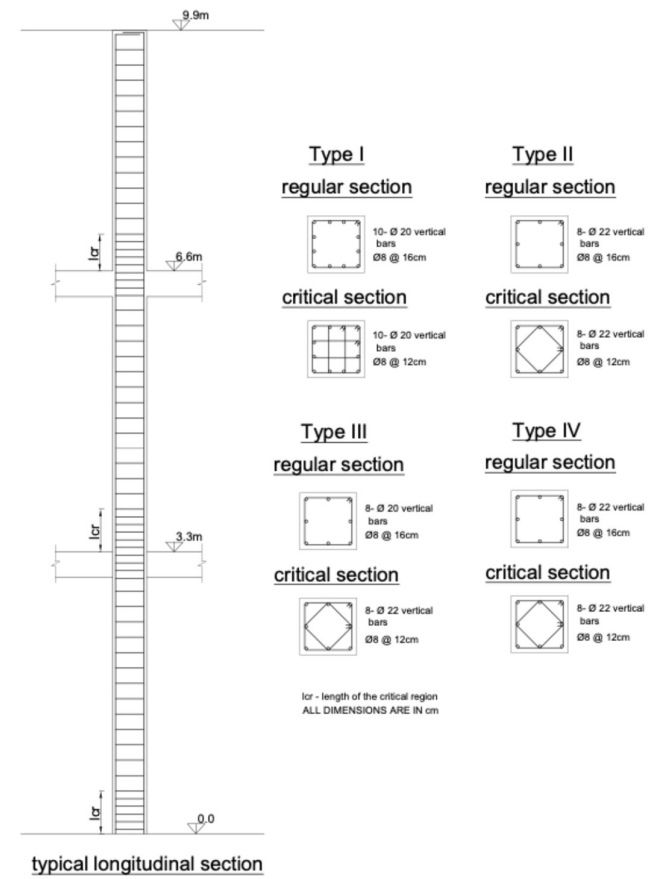

Figure 33: Columns reinforcement

11. DESIGN OF SHEAR WALLS

11.1. Dimension Check

The dimension of the shear walls must be checked, according to EC8. Their dimensions are:

- $b_w = 0.3\ m$, the breadth of the shear walls
- $l_w = 1.2$, the length of the shear walls
- $h_w = 3.3\ m$ per story, the height of the shear walls
- $h_s = 3.04m$, the interstory height

The checks on these dimensions are performed:

$$\frac{l_w}{b_w} = \frac{1.3}{0.3} = 4.33 \geq 4$$

$$h_w = 3.3m \leq 3 * l_w = 3 * 1.2 = 3.6m$$

Check for the thickness of the web (5.4.1.2.3):

$$b_{wo} = \min\left\{0.15, \frac{h_s}{20}\right\}$$

$$\frac{h_s}{20} = \frac{3.04}{20} = 0.152$$

$$b_{wo} = 0.3m > 0.152$$

Hence the shear wall's dimensions checks are satisfactory.

11.2. Structural system

As studied in part 4, the shear walls take 60.904% > 50% of total base shear and the columns 39.096% > 25%. Therefore, the structural system acts as a dual system.

11.3. Behavior factor

The behavior factor shall be computed as:

$$q = q_0 * k_w$$

Considering a DCM dual system:

$$q_0 = 3.0\ \frac{\alpha_u}{\alpha_1}$$

And

$$k_w = \frac{1 + \alpha_0}{3} \leq 1$$

With $\alpha_0 = \frac{\sum h_{wi}}{\sum l_{wi}}$, the aspect ratio.

With $\frac{\alpha_u}{\alpha_1} = 1.2$ with wall equivalent dual system, it results:

$$q_0 = 3.0 * 1.2 = 3.6$$

To compute k_w the factor reflecting failure mode in structural system with walls:

$$h_{wi} = 3.3\ m$$

$$l_{wi} = 1.3\ m$$

The aspect ratio can be computed, $\alpha_0 = 3.3/1.3 = 2.53$, if large then is ductile behavior, implying moderately ductile behavior.

We have: $k_w = (1 + 2.53)/3 = 1.176$ >1. Hence taking $k_w = 1$

Finally:

$q = 3.6 * 1 = 3.6$

$q = 3.6 > 1.5$

The upper limit factor introduced in EC-08 3.2.2.5(3) to account for energy dissipation capacity is derived as above.

$q \leq 4, DCM$(dissipative structural behavior)

As per table 6.1, EC-08, the check is satisfied.

11.4. Flange of the shear wall

Now the reinforcement for the flange of the shear wall should be computed:

$$A_{st} = A_{sc} = n * \left(\frac{\pi}{4} d^2\right)$$

d – diameter of the longitudinal reinforcement

n = 16 (no of vertical reinforcement per layer)

$d = 18\ mm$

$M_{Rd} = 2034\ kNm$ from the software VCASLU

The percentage of reinforcement of the flange is given by:

$$\%\ of\ reinforcement = (A_{st}/A_c) * 100$$

The value for the percentage of reinforcement that has to be provided is 2.08%, within 1-4% up to the floor above the critical height which here is till the 2nd floor.

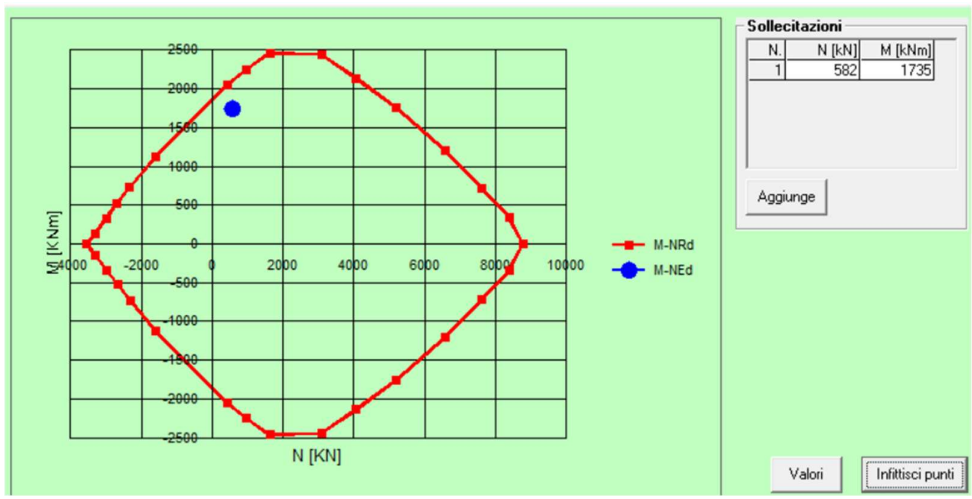

Figure 34: M-N curve of the shear walls

11.5. Shear strength of shear wall

The shear strength can be computed using:

$$V_{Ed,c} = 582\ kN$$

As per EN1992-1-1, clause 6.2.2

Shear resistance without shear reinforcement:

$$V_{Rd,c} = [Crd, c\ k\ (100\rho_1 f_{ck})^{\frac{1}{3}} +\ k_1\sigma_{cp}]b_w d$$

$$k = 1 + \sqrt{\frac{200}{d}} = 1.406 < 2.0$$

$$\sigma_{cp} =\ N_{Ed}/A_c$$

$$\rho_1 = \frac{A_{sl}}{b_w d} = 0.0138 < 0.02, hence\ okay$$

$$C_{rd,c} = \frac{0.18}{\gamma_c} \text{ (dimensionless)}$$

$$V_{Rd,c} = 253.99\ kN$$

$$V_{Ed,c} > V_{Rd,c}$$

The acting shear force is greater than the shear resistance of the concrete alone, therefore shear reinforcement is required, as per EN1992-1-1, clause 6.2.3.

Elements requiring shear reinforcement:

$$V_{Rd} = min\{\frac{A_{sw}}{s_w}\ 0.9\ d\ f_{ywd}(cot\theta + cot\alpha); v_1 f_{cd} b_w 0.9d(cot\theta + cot\alpha)/(1 + cot^2\theta)\}$$

A_{sw} – cross sectional area of the shear reinforcement

v_1 – shear reduction factor for concrete cracked in shear = 0.6, f_{ck}<60Mpa

d – effective depth of the section in mm
s_w – spacing of the stirrup
b_w – minimum width between tension and compression chords= 300mm

$$V_{Rd} = 1251.33\ kN$$
$$V_{Rd} > V_{Ed}$$

The shear resistance provided is greater than the design shear requirement, hence the required shear reinforcement is provided.

$$v_1 = 0.6$$

Therefore ties of spacing 200mm throughout the height of the shear wall can be provided with $\alpha = 90°$ and $\theta = 25°$.

11.6. Moment Envelope

For the bending reinforcement, the moment envelope has to be computed.

$$l_w = 1.3m$$
$$h_s = 3.04m$$

$$h_w = 9.9m$$
$$a_1 = 1.65m = h_{cr}$$
$$a_1 = h_{cr} = \max\left\{l_w, \frac{h_w}{6}\right\}$$

but $h_{cr} \leq min\ \{2l_w, h_s\}$
h_{cr} is the critical height (m), as per EC-08, clause 5.4.3.4.2
h_{cr} describes the height where plastic deformation is expected.
h_s is the interstory height

Figure 35: Moment envelope of shear wall 1

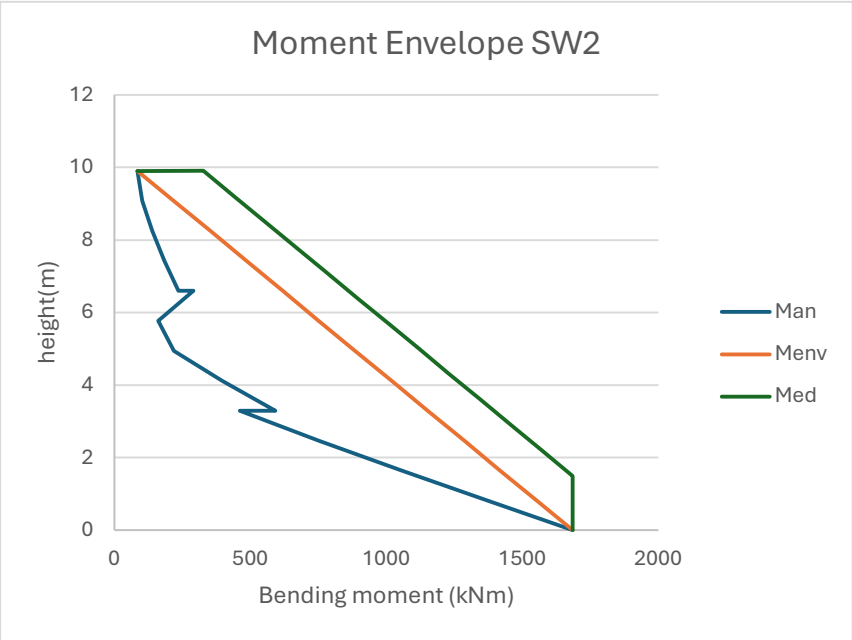

Figure 36: Moment envelope of shear wall 2

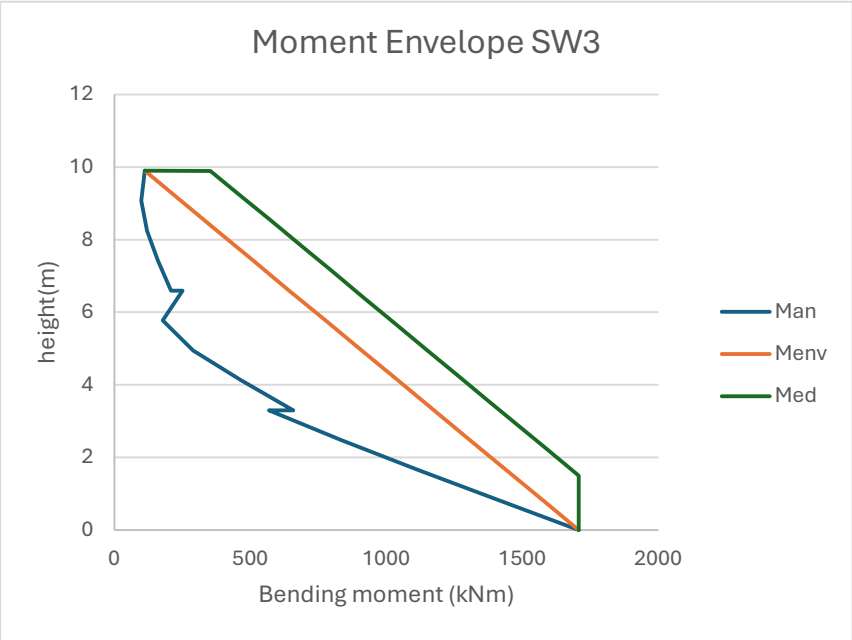

Figure 37: Moment envelope of shear wall 3

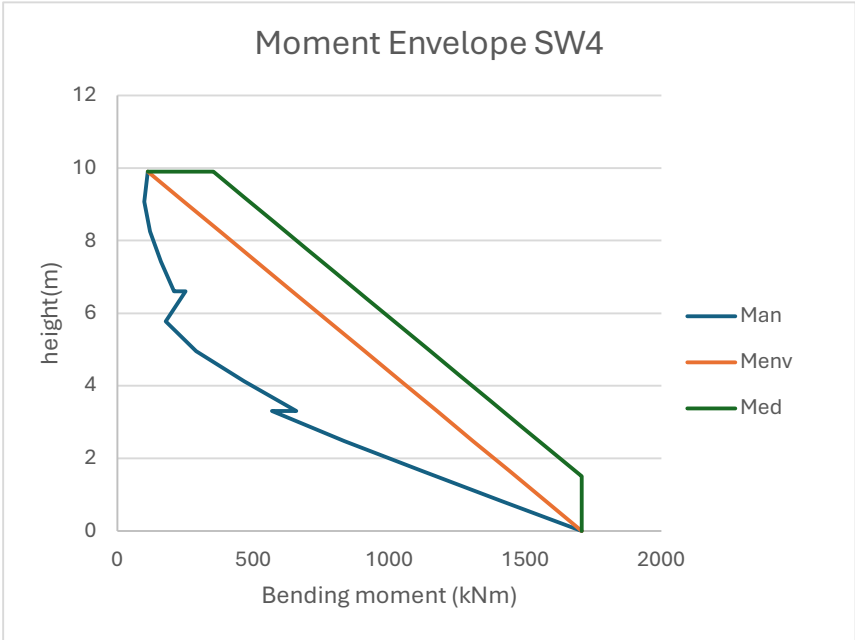

Figure 38: Moment envelope of shear wall 4

The bending moment design of walls must consider higher modes non-linear effects and assure that the plastic hinge will form at the base. To achieve this, the moment distribution that comes from the analysis M_{an} is transformed into a linear envelope M_{env}.

Additionally, this envelope must be translated upwards at a distance of $h_{cr} = 1.65\ m$, which is the height of the plastic hinge or dissipative zone, to get the final design moment M_{Ed}.

11.7. Shear Envelope

To compute the shear envelope for the shear walls, the procedure is to to get the design shear diagrams from the diagrams coming from the analysis, which is the following:

- Split the wall along the height at the point located at a height of $h_w/3$, h_w the height of the wall.
- In the bottom part of the wall, the design envelope is the analysis one amplified by a factor of 1.5.
- In the top part of the wall, the design envelope is computed with a linear interpolation between the amplified value at $h_w/3$ and one half the amplified value at the base.

Figure 39: Shear envelope of shear wall 1

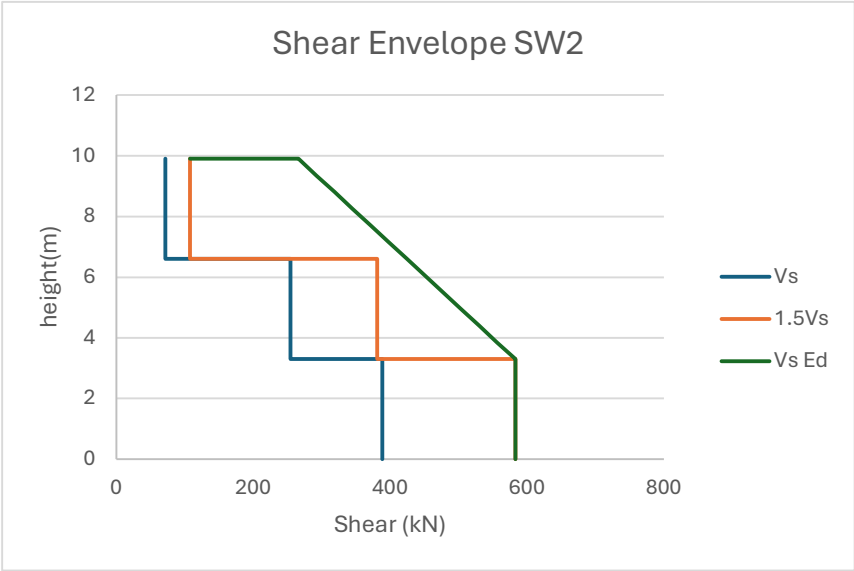

Figure 40: Shear envelope of shear wall 2

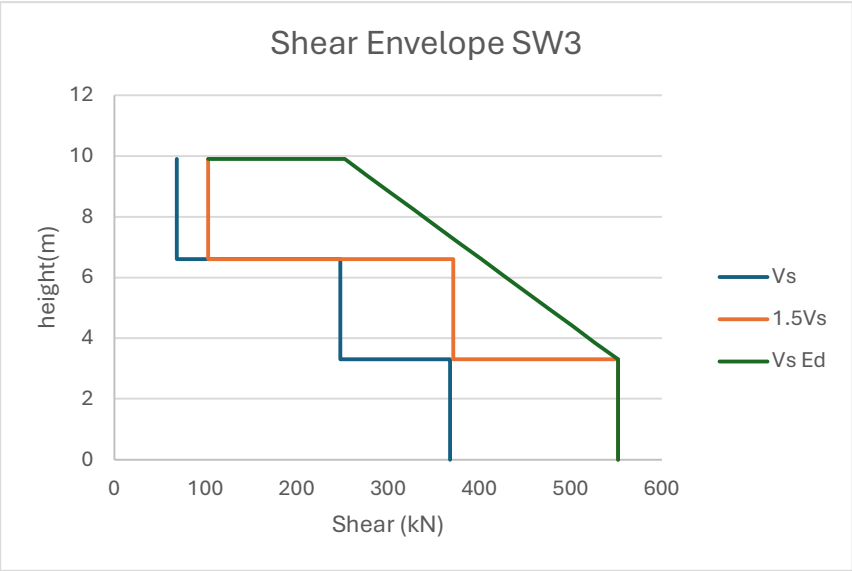

Figure 41: Shear envelope of shear wall 3

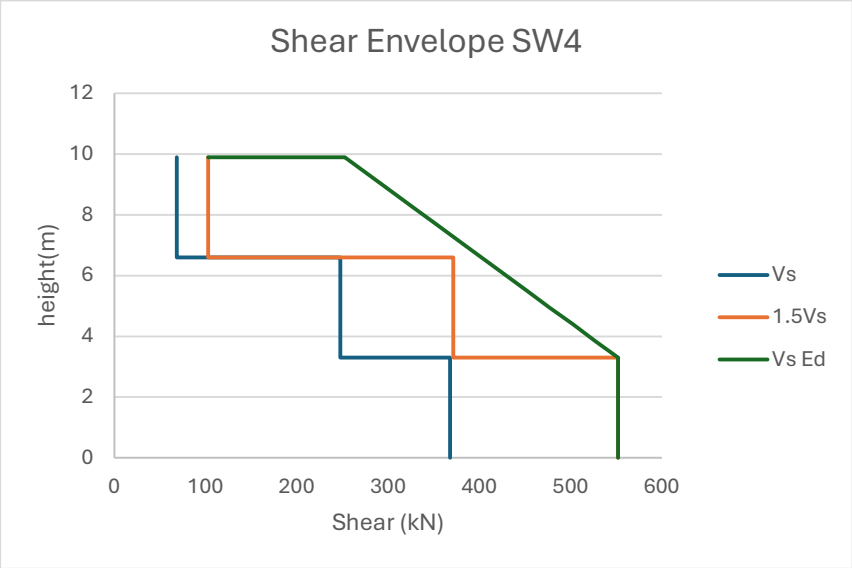

Figure 42: Shear envelope of shear wall 4

11.8. Confinement Length

A specified ductility should be provided at the base of shear walls:

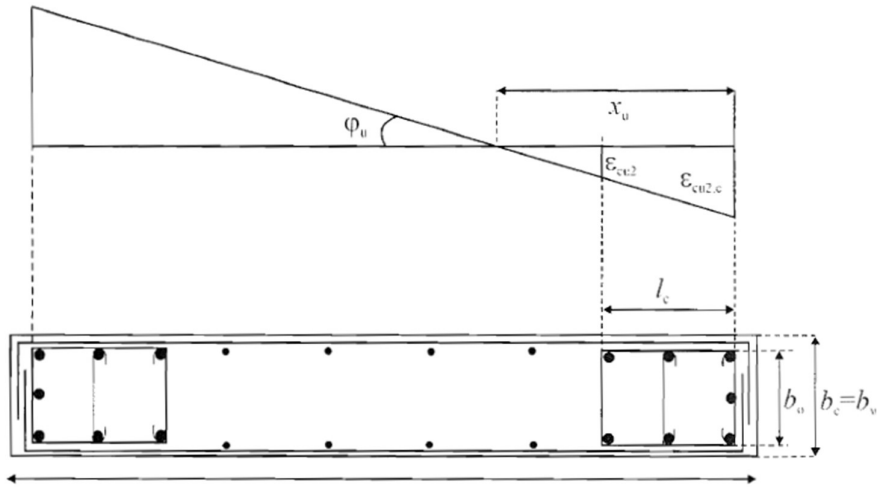

Figure 43: Confinement length

The confinement length can be computed with:

$h_{cr} = 1.65\ m$, the critical height

l_c is the length of cross-section ends to be confined

$l_c = (3 * 75\ mm) + 18\ mm = 243\ mm$

b_c is the gross cross-sectional width

h_c is the gross cross-sectional depth parallel to the horizontal direction in which the value of μ_φ used.

The neutral axis depth x_u considered from the compression fibre is given by:

$x_u = \frac{(v_d+\omega_v)l_w b_c}{b_0}$

$l_w = 1.3\ m$

$b_c = 0.3\ m$

$b_0 = (0.3 - 0.035 - 0.035) = 0.230\ m$

A_{sv} is the total area of vertical reinforcement in the web of the wall

$x_u = 476.99\ mm$ from the compression fibre

$l_c = 243\ mm > x_u/2$, the confinement length is greater than 0.5 of the neutral axis depth hence the check is satisfied

v_d – normalised axial force

$$v_d = \frac{N_{ed}}{A_c . f_{cd}}$$

$N_{ed} = 386.4\ kN$

$A_c = (1.3 * 0.3) = 0.39\ m^2$

After computation, the value of the normalised axial force is $v_d = 0.05944$.

Detailing of primary seismic vertical element for ductility

$$\omega_v = \frac{\frac{A_{sv}}{h_c . b_c} . f_{yd}}{f_{cd}}$$

With ω_v the mechanical reinforcement ratio of vertical reinforcement in the web

$\omega_v = 0.194$

$\alpha\omega_{wd} = 0.126 \geq 30\mu_\phi v_d \varepsilon_{sy,d} \frac{b_c}{b_o} - 0{,}035$ >0.08 Hence okay

$\alpha\omega_{wd}$ is the effective mechanical volumetric ratio

α is the confinement effectiveness factor, for rectangular cross−sections as per EC-08, 5.2.3.4(3):

$$\alpha = \alpha_n \, . \alpha_s$$

$$\alpha_n = 1 - \frac{\Sigma b_i^2}{6\, b_0\, h_0}$$

$$\alpha_s = (1 - s/2b_0)\,(1 - s/2h_0)$$

$$\alpha\omega_{wd} \geq 30\mu_\phi v_d \varepsilon_{sy,d} \frac{b_c}{b_o} - 0{,}035$$

The above condition is satisfied for the confinement stirrups of 4 legs with 8mm diameter bars spaced 70mm c/c along the length of the wall at least till the critical height, which ensure seismic ductility till the critical height.

b_0 – width of the confined core = 225mm
h_0 – depth of the confined core = 212mm
S – spacing of transverse reinforcement = 200mm
b_i^2 – square of distance between two consecutive engaged bars

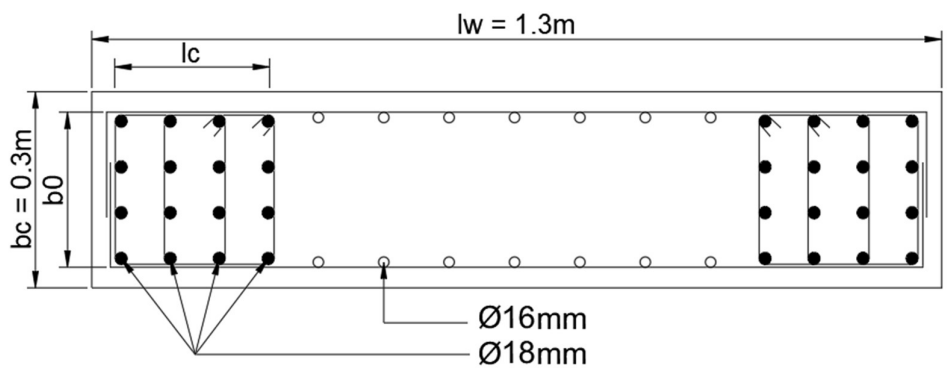

Figure 44: Cross-sectional view of the shear wall

Finally, the reinforcement details in shear walls are:

Flange reinforcement details:

- 16 - ϕ 18mm bars for each flange
- The vertical reinforcement spaced @ 75mm c/c horizontally
- The vertical reinforcement spaced @70mm c/c vertically

Confinement reinforcement details:

- 2- ϕ8mm ties @ 70mmc/c is provided until the critical height h_{cr}, ensuring the seismic ductility.
- For the rest of the height 2- ϕ8mm ties @ 150 mmc/c shall be provided

Web reinforcement details:

- ϕ16 mm @ 100mm c/c spacing of vertical reinforcement provided for the web.

Distance between the stirrups:

- The distance between the stirrups is 75mm (S_{prov})

$$s = min\left\{\frac{b_0}{2}, 175mm, 8d_{bl}\right\}$$

s = 115mm

$s_{prov} = 75\, mm < s$, hence okay.

$$s_{max} = 200\, mm$$

Two stirrups are provided of four legs each flange.

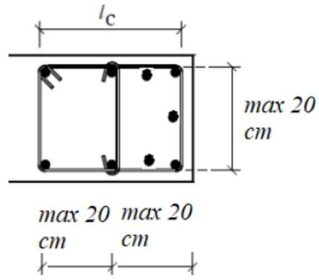

Figure 45: Distance between the stirrups

Table 46: Reinforcement in shear walls

SW	M_{Ed} kN.m	M_{Rd} kN.m	Bending reinforcement	V_{Ed} kN	V_{Rd} kN	Shear reinforcement till h_{cr}
SW1	1735.7	1857	16 – ϕ 18	582	1251	2-ϕ8mm ties @ 70mmc/c
SW2	1686	1857	16 – ϕ 18	580	1251	2-ϕ8mm ties @ 70mmc/c
SW3	1706.4	1857	16 – ϕ 18	552	1251	2-ϕ8mm ties @ 70mmc/c
SW4	1706.4	1857	16 – ϕ 18	552	1251	2-ϕ8mm ties @ 70mmc/c

11.9. Manual check on base shear due to seismic action

From the modal analysis the period of mode 1 is obtained.

The soil properties of L'Aquila, Type1 soil

$$a_{gR} = 3.67875\ \frac{m^2}{s}$$

Elastic response spectrum data:

- $T_R = 495\ years$
- $S = 1.2$
- $T_B = 0.15s$
- $T_c = 0.5s$
- $T_D = 2s$
- $\eta = 1$
- $T_1 = 0.6789\ s$ (period corresponding to mode 1)
- $S_E(T_1) = 8.1156 m/s^2$ (on interpolation)
- $m = 875911.295\ kg$
- $V_b = 7108.5457\ kN$
- $0.85V_b = 6042.2638kN$

With $S_E(T_1)$ the acceleration corresponding to mode 1 and m is the total mass of the structural elements in kg considering both self-weight and imposed loads excluding the vertical elements.

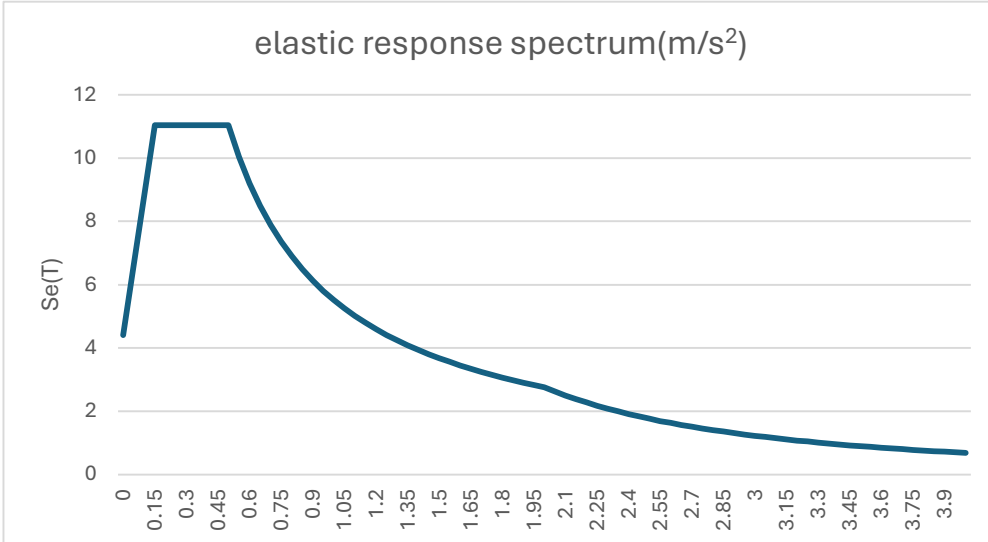

Figure 46: Elastic response spectrum

Table 47: Base shear corresponding to elastic response spectrum

Column	V	Column	V	Column	V
-	kN	-	kN	-	kN
C1	96.3	C9	130.7	C17	100.2
C2	1378.5	C10	117.7	C18	104.8
C3	129.2	C11	123.7	C19	130.7
C4	228.7	C12	130.4	C20	121.6
C5	183.6	C13	133.3	C21	1424.9
C6	103	C14	125.2	C22	83.9
C7	131.4	C15	137.1		
C8	114.3	C16	116.4	Total	5345.6

The difference between the result obtained from the manual check and the MIDAS with respect to modal analysis has the difference of 696.66385kN which is acceptable.

12. KILOGRAM OF STEEL PER CUBIC METER OF CONCRETE AND SAFETY RATIO

After designing the reinforcement of each element, it is possible to compute the total kilograms of reinforcement per cubic meter of concrete due to bending, shear, in critical zones and nodes. For the beams, the kilograms of reinforcement per cubic meter of concrete are:

Table 48: Kilograms of reinforcement per cubic meter in beams

Column	$\rho_{Bending}$ kg/m^3	ρ_{Shear} kg/m^3	$\rho_{Critical\ zones}$ kg/m^3
B.ab.1	73.00	15.55	55.28
B.bc.1	64.71	15.55	55.28
B.cd.1	64.71	15.55	55.28
B.ab.2	73.00	16.58	55.28
B.bc.2	64.71	16.58	55.28
B.cd.2	64.71	16.58	55.28
B.ab.3	73.00	15.55	55.28
B.bc.3	64.71	18.66	55.28
B.cd.3	64.71	18.66	55.28
A.ab.1	42.53	11.68	55.28
A.bc.1	42.53	16.05	55.28
A.cd.1	42.53	19.69	55.28
A.de.1	42.53	16.58	55.28
A.ab.2	42.53	11.68	55.28
A.bc.2	42.53	13.37	55.28
A.cd.2	42.53	21.77	55.28
A.de.2	42.53	18.66	55.28
A.ab.3	36.83	11.68	55.28
A.bc.3	36.83	13.37	55.28
A.cd.3	36.83	15.55	55.28
A.de.3	36.83	12.44	55.28

For the columns, the reinforcement is the same all along each column:

Table 49: Kilograms of reinforcement per cubic meter in columns

Column	$\rho_{Bending}$ kg/m^3	ρ_{Shear} kg/m^3	$\rho_{Critical\ zones}$ kg/m^3
I	184.9	19.4	62.7
II	149.2	18.1	53.5
III	123.3	15.7	53.5
IV	149.2	18.1	53.5

Reinforcement is same for all shear walls

Table 50: Kilograms of reinforcement per cubic meter in shear walls

Shear wall	$\rho_{Bending}$ kg/m^3	ρ_{Shear} kg/m^3	$\rho_{Critical\ zones}$ kg/m^3
I	81.95	42.08	20.31

The values for the reinforcement ratio in the nodes are:

Table 51: Kilograms of reinforcement per cubic meter in nodes

Node	$\boldsymbol{\rho}$ kg/m³
B.b.1/II1	240.31
B.c.1/I1	269.06
B.b.2/II2	240.31
B.c.2/I2	269.06
B.b.2/II2	240.31
B.c.2/I2	269.06
A.c.1/IV1	209.84
A.e.1/III1	181.53
A.c.2/IV2	209.84
A.e.2/III2	181.53
A.c.3/IV3	204.14
A.e.3/III3	175.83

The Structural Plan Density (SPD) is computed by dividing the area of all the columns and shear wall by the plan area:

Table 52: Structural plan density factor

Area of a column m²	Number of columns -	Area of a shear wall m²	Number of shear walls -	Total area of vertical resisting elements m²	Area of the plan m²	Structural Plan Density -
0.16	18	0.39	4	4.44	268.6	0.0165

The safety factor at the ground floor is equal to:

$$\frac{V_{Rd}}{V_{Ed}}$$

With:

- V_{Rd} the floor shear strength at ground floor
- V_{Ed} the seismic design shear force at ground floor

It results:

Table 53: Safety factor at ground floor

Quantity	Value
$\boldsymbol{V_{Rd,columns}}$ (kN)	1311.3
$\boldsymbol{V_{Ed,columns}}$ (kN)	882.95
Safety factor of columns	1.49
$\boldsymbol{V_{Rd,shear\ walls}}$ (kN)	5004
$\boldsymbol{V_{Ed,shear\ walls}}$ (kN)	2266
Safety factor of shear walls	2.20
$\boldsymbol{V_{Rd,total}}$ (kN)	6315.3
$\boldsymbol{V_{Ed,total}}$ (kN)	3148.95
Total safety factor	2.00

The total safety factor at ground floor is greater than 2.00, the building is then safe.

13. CONCLUSION

The goal of this project was to design a three-stories building able to sustain strong earthquakes, a natural phenomenon that occurs frequently in Italy, and particularly in the region of L'Aquila. Using the finite-element software Midas, the internal forces and moments under different load combinations were found, and later used to design the required reinforcement in beams, columns and shear walls, according to EC2 and EC8 procedures and checks.

It is a moral duty for engineers designing buildings in these regions and construction contractors to follow and respect the seismic specifications provided by the codes, to ensure the safety of buildings under earthquakes. In this regard, if buildings are badly designed or have defects due to the construction process, they may not be able to sustain the accidental seismic loads, and this situation could lead to a disaster in terms of human lives.

BIBLIOGRAPHY

Biasioli, F et al. 2014. *Eurocode 2: Design of Concrete Buildings*. Luxembourg: Publications Office of the European Union.

Bisch, P et al. 2012. "*Eurocode 8: Seismic Design of Buildings. Worked Examples*." Luxembourg: Publications Office of the European Union.